심사결과 통지서

신청인	사업장명	극동호이스트(주)	사업장관리번호	134-81-013350
	사업자등록번호	134-81-01335	대표자 성명	최성찬
	소재지	(154 - 23) 경기도 안산시 단원구 해봉로 119(성곡동)		

안전인증대상 기계·기구명	호이스트 [동일형식인정 - "별첨" 참조]		
형 식 (규 격)	KD15T-D	용 량 (등 급)	15 Ton

산업안전보건법 제 34조 및 같은 법 시행규칙 제58조의4에 따라 실시한

[ ] 예비심사

[√] 서면심사

[ ] 기술능력 및 생산체계 심사

[ ] 개별 제품심사

[ ] 개별 제품심사(제작중)

[ ] 형식별 제품심사

결과가 [√] 적 합 / [ ] 부적합 함을 통지합니다.

2019년 05월 16일

인증심사원 이승태 이 승태 (서명 또는 인)

한국산업안전보건공단 이사장

제2022 - 2226284 호

안 전 인 증 서

(사업장명) 극동호이스트(주)

(소 재 지) (15423)경기도 안산시 단원구 성곡동 630-2

위 사업장에서 제조하는 아래의 품목이 산업안전보건법 제84조 및 시행규칙 제110조제1항에 따른 안전인증 심사 결과 안전·보건기준에 적합하므로 안전인증표시의 사용을 인증합니다.

품 목

호이스트 (국내품)

형식,모델(용량,등급)/인증번호

KD15T-D (15Ton) / 22-AH2AC-00042

인 증 기 준

고용노동부 고시 제2020 - 41호 (위험기계·기구 안전인증 고시)

인 증 조 건

(15423)경기도 안산시 단원구 성곡동 630-2에서 생산된 동일 형식 제품에 한함

설치장소 : 옥외

2022년 09월 22일

한국산업안전보건공단 이사장

불법복제 및 배포금지

서 면 심 사 서 류

형식 번호 : KD15T-D

극 동 호 이 스 트 ㈜

주소 : 경기도 안산시 단원구 해봉로 119 (성곡동)

TEL : 031) 491 - 5311

FAX : 031) 494 - 5315

192.168.11.51 / 2019-05-21 13:51:47

동 일 형 식 일 람 표

사업장명	극동호이스트㈜	개정일자 및 번호		인증번호	
형식 및 모델		동일 형식 인정범위 및 내역			비 고
형식	모델	권상속도(m/min)	횡행속도(m/min)	양정(m)	횡행방식
KD15T-D	KD15-L12-D	고속 : 4.5 m/min 저속 : 3.0 m/min	고속 : 15 m/min 저속 : 10 m/min 듀얼 고속 : 15/7.5 m/min 듀얼 저속 : 10/5 m/min	12	모터 구동식	횡행 인버터 포함
	KD15-L18-D			18		
	KD15-L24-D			24		
	KD15-L30-D			30		

불법복제 및 배포금지

192.168.11.51 / 2019-05-21 13:51:47

불법복제 및 배포금지

제 2012-BJ-0009 호

안 전 인 증 서

정호엔지니어링

경기도 광명시 노동사동 440-5

위 사업장에서 제조하는 아래의 품목이 산업안전보건법 제34조 및 같은 법 시행규칙 제58조의4제4항에 따른 안전인증 심사 결과 안전·보건기준에 적합하므로 안전인증표시의 사용을 인증합니다.

품 목

양중기용 과부하방지장치

형식·모델/용량·등급/인증번호

형식·모델	용량·등급	인증번호
JDL-100	J-2	12-AV2BJ-0009

인 증 기 준

방호장치 의무안전인증 고시(고용노동부고시 제2010-36호)

인 증 조 건

아래 주소에서 생산되는 제품에 한함.

정호엔지니어링, 경기도 광명시 노동사동 440-5

2012년 06월 11일

한국산업안전보건공단 이사장

192.168.11.51 / 2019-05-21 13:51:47

불법복제 및 배포금지

제 2012-BJ-0008 호

안 전 인 증 서

정호엔지니어링

경기도 광명시 노동사동 440-5

위 사업장에서 제조하는 아래의 품목이 산업안전보건법 제34조 및 같은 법 시행규칙 제58조의4제4항에 따른 안전인증 심사 결과 안전 · 보건기준에 적합하므로 안전인증표시의 사용을 인증합니다.

품 목

양중기용 과부하방지장치

형식 · 모델/용량 · 등급/인증번호

형식·모델	용량·등급	인증번호
JDLS-70	J-2	12-AV2BJ-0008

인 증 기 준

방호장치 의무안전인증 고시(고용노동부고시 제2010-36호)

인 증 조 건

아래 주소에서 생산되는 제품에 한함.

정호엔지니어링, 경기도 광명시 노동사동 440-5

2012년 06월 11일

한국산업안전보건공단 이사장

192.168.11.51 / 2019-05-21 13:51:47

불법복제 및 배포금지

Ⅱ. 도 면

1. 기 계

192.168.11.51 / 2019-05-21 13:51:47

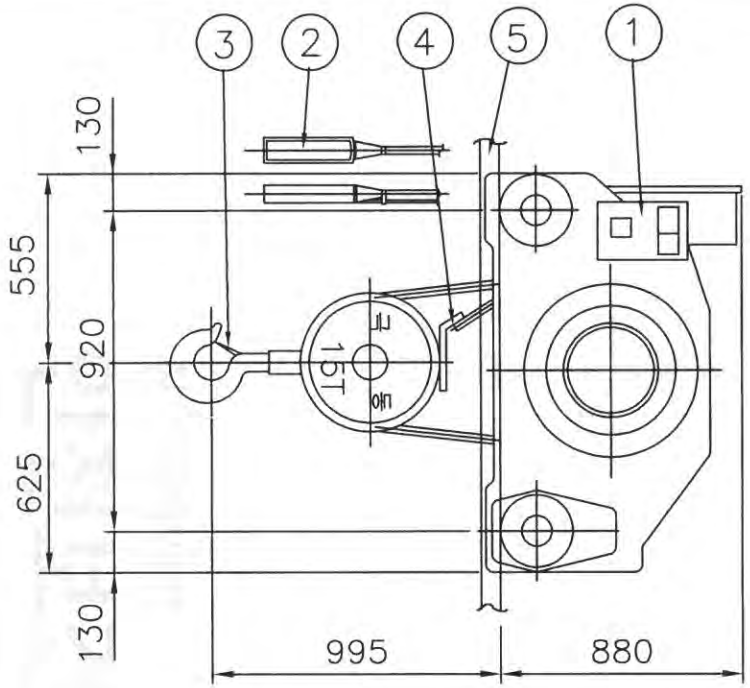

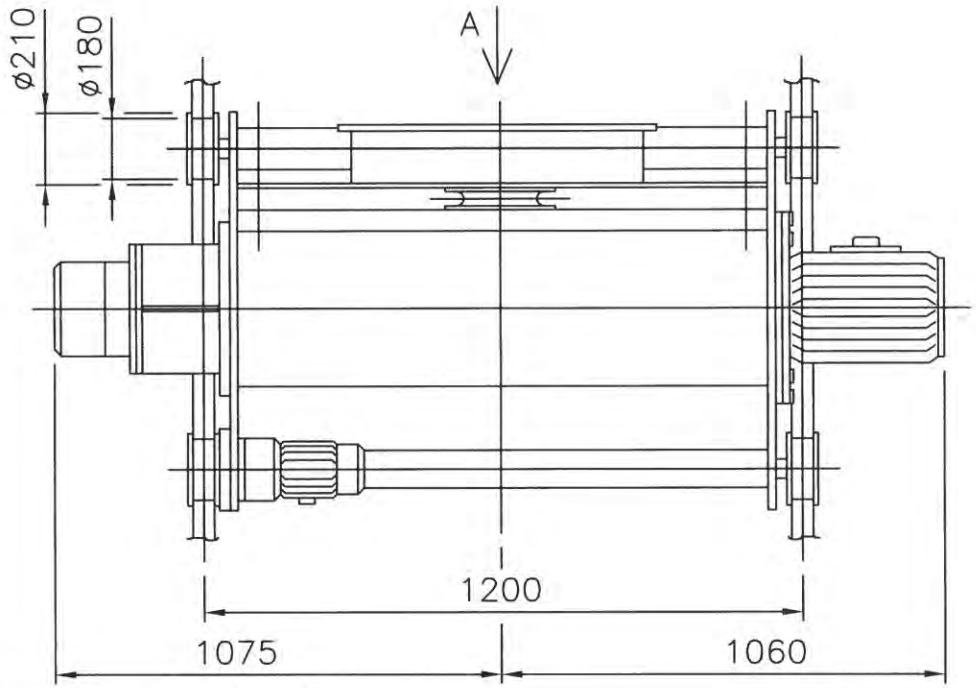

SPECIFICATION			
HOISTING LOAD			15 TON
TESTING LOAD			18.75 TON
LIFT			12 M
HOISTING	HIGH	SPEED	4.5 M/MIN
		MOTOR	13 KW x 8P
	LOW	SPEED	3 M/MIN
		MOTOR	8.5 KW x 12P
TRAVERS-ING	HIGH	SPEED	15 M/MIN
		MOTOR	1.5 KW x 4 P
	LOW	SPEED	10 M/MIN
		MOTOR	1.0 KW x 6 P
	DUAL HIGH	SPEED	15/7.5 M/MIN
		MOTOR	1.5/0.75 KW x 4/8 P
	DUAL LOW	SPEED	10/5 M/MIN
		MOTOR	1.0/0.5 KW x 6/12 P
WIRE ROPE			(6x29 IWRC) ø18 x 4 FALLS
POWER SOURCE			AC3ø 220/380/ 440/460/480V 60Hz
TRAVERSING RAIL			22 KG/M
GROSS WEIGHT			1970 KG

극동 호이스트
제한하중
15000 K

VIEW A

NO.	DESCRIPTION	MT'L	SUB QT'Y	TOTAL QT'Y	SUB WEIGHT(Kg)	TOTAL WEIGHT(Kg)	REMARKS.
5	T/S RAIL	–		–			22KG/M
4	UPPER LIMIT S/W	SS400		1			
3	SAFETY LATCH	SPC		1			
2	EMERGENCY S/W	–		1			
1	LOAD LIMITER	–		1			

PROJECT		DATE	DIM
			mm
TITLE	KD15 – L12 – D ARRANGEMENT DRAWING FOR HOIST	SCALE	PROJECTION
		A3/20	3rd

DRAWN	DESIGNED	CHECKED	APPROVED	REF. DRAWING

극동호이스트 주식회사
KUK DONG HOIST CO., LTD.

SHEET No.

DWG No. KD15D1200

무단배포금지

192.168.11.51 / 2019-05-21 13:51:47

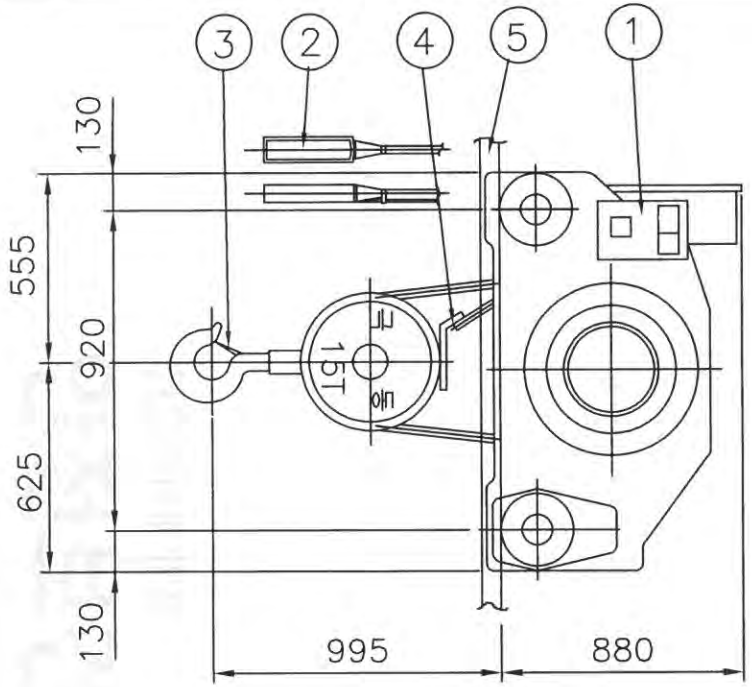

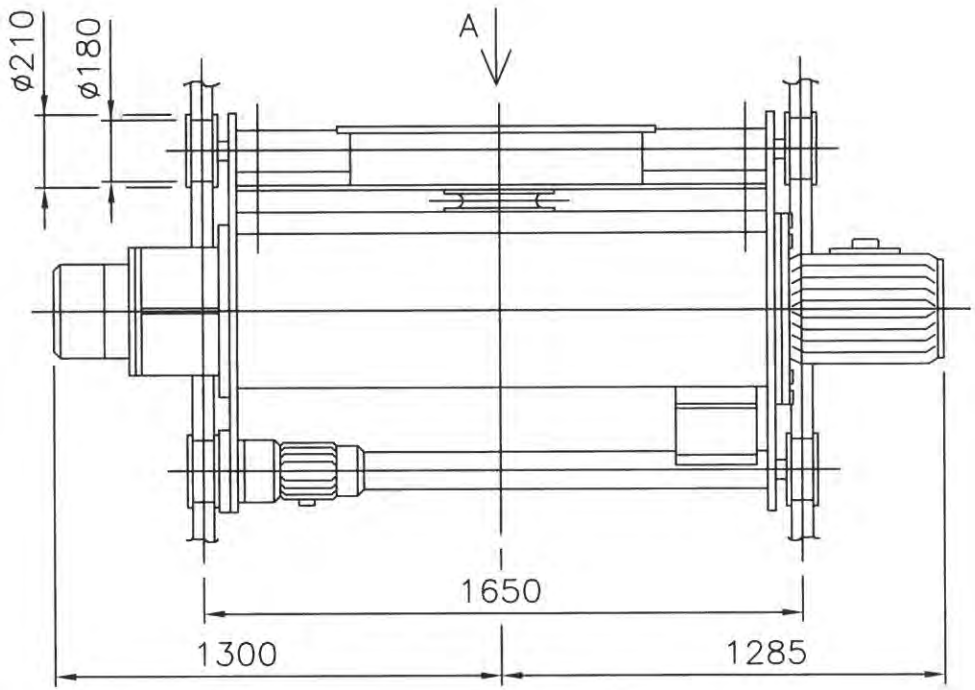

SPECIFICATION			
HOISTING LOAD			15 TON
TESTING LOAD			18.75 TON
LIFT			18 M
HOISTING	HIGH	SPEED	4.5 M/MIN
		MOTOR	13 KW x 8P
	LOW	SPEED	3 M/MIN
		MOTOR	8.5 KW x 12P
TRAVERS-ING	HIGH	SPEED	15 M/MIN
		MOTOR	1.5 KW x 4 P
	LOW	SPEED	10 M/MIN
		MOTOR	1.0 KW x 6 P
	DUAL HIGH	SPEED	15/7.5 M/MIN
		MOTOR	1.5/0.75 KW x 4/8 P
	DUAL LOW	SPEED	10/5 M/MIN
		MOTOR	1.0/0.5 KW x 6/12 P
WIRE ROPE			(6x29 IWRC) ø18 x 4 FALLS
POWER SOURCE			AC3ø 220/380/ 440/460/480V 60Hz
TRAVERSING RAIL			22 KG/M
GROSS WEIGHT			1970 KG

극동 호이스트

제한하중

15000 K

VIEW A

NO.	DESCRIPTION	MT'L	SUB QT'Y	TOTAL QT'Y	SUB WEIGHT(Kg)	TOTAL WEIGHT(Kg)	REMARKS.
5	T/S RAIL	–		–			22KG/M
4	UPPER LIMIT S/W	SS400		1			
3	SAFETY LATCH	SPC		1			
2	EMERGENCY S/W	–		1			
1	LOAD LIMITER	–		1			

PROJECT		DATE	DIM
			mm
TITLE	KD15 – L18 – D ARRANGEMENT DRAWING FOR HOIST	SCALE	PROJECTION
		A3/20	3rd

DRAWN	DESIGNED	CHECKED	APPROVED	REF. DRAWING

극동호이스트 주식회사
KUK DONG HOIST CO., LTD.

SHEET No.

DWG No. KD15D1800

192.168.11.51 / 2019-05-21 13:51:47

출판물제 및 배포금지

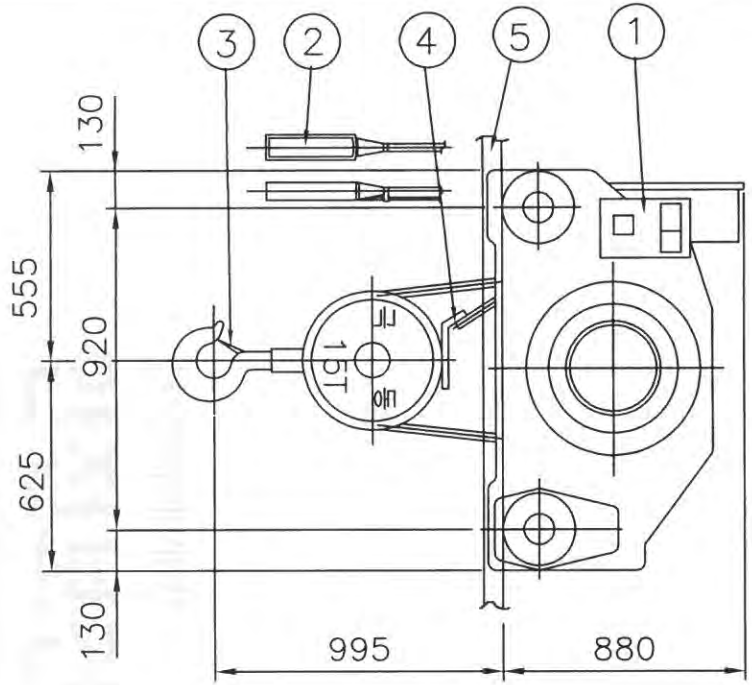

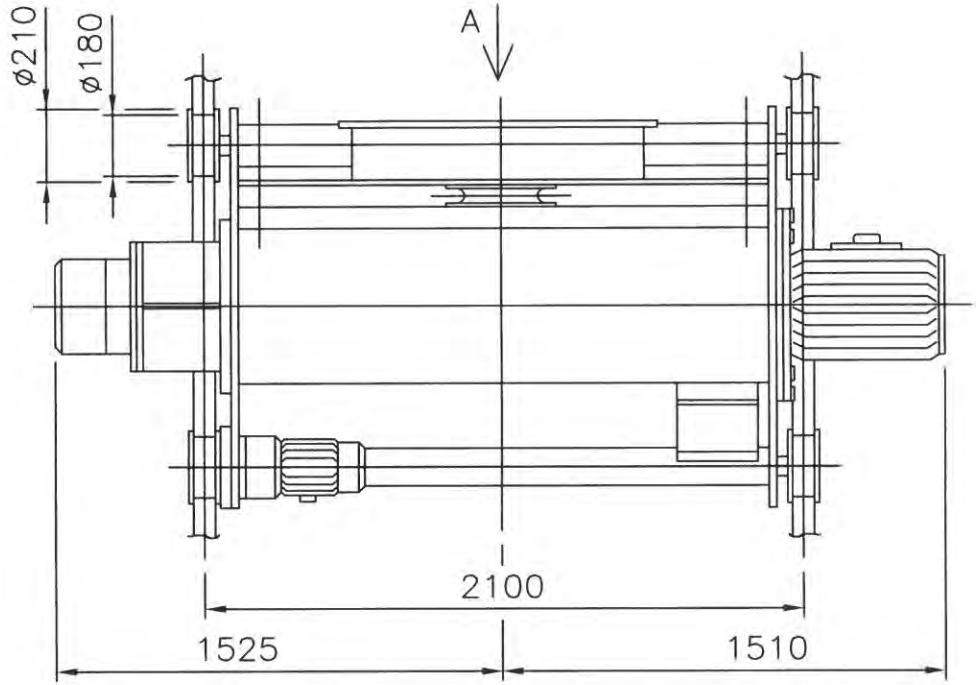

SPECIFICATION			
HOISTING LOAD			15 TON
TESTING LOAD			18.75 TON
LIFT			24 M
HOISTING	HIGH	SPEED	4.5 M/MIN
		MOTOR	13 KW x 8P
	LOW	SPEED	3 M/MIN
		MOTOR	8.5 KW x 12P
TRAVERS-ING	HIGH	SPEED	15 M/MIN
		MOTOR	1.5 KW x 4 P
	LOW	SPEED	10 M/MIN
		MOTOR	1.0 KW x 6 P
	DUAL HIGH	SPEED	15/7.5 M/MIN
		MOTOR	1.5/0.75 KW x 4/8 P
	DUAL LOW	SPEED	10/5 M/MIN
		MOTOR	1.0/0.5 KW x 6/12 P
WIRE ROPE			(6x29 IWRC) ø18 x 4 FALLS
POWER SOURCE			AC3ø 220/380/ 440/460/480V 60Hz
TRAVERSING RAIL			22 KG/M
GROSS WEIGHT			2100 KG

극동 호이스트
제한하중
15000 K

VIEW A

NO.	DESCRIPTION	MT'L	SUB	TOTAL	SUB	TOTAL	REMARKS.
			QT'Y		WEIGHT(Kg)		
5	T/S RAIL	–		–			22KG/M
4	UPPER LIMIT S/W	SS400		1			
3	SAFETY LATCH	SPC		1			
2	EMERGENCY S/W	–		1			
1	LOAD LIMITER	–		1			

PROJECT		DATE	DIM
			mm
TITLE	KD15 – L24 – D ARRANGEMENT DRAWING FOR HOIST	SCALE	PROJECTION
		A3/20	3rd

DRAWN	DESIGNED	CHECKED	APPROVED	REF. DRAWING

극동호이스트 주식회사
KUK DONG HOIST CO., LTD.

SHEET No.

DWG No. KD15D2400

불법복제 및 배포금지

192.168.11.51 / 2019-05-21 13:51:47

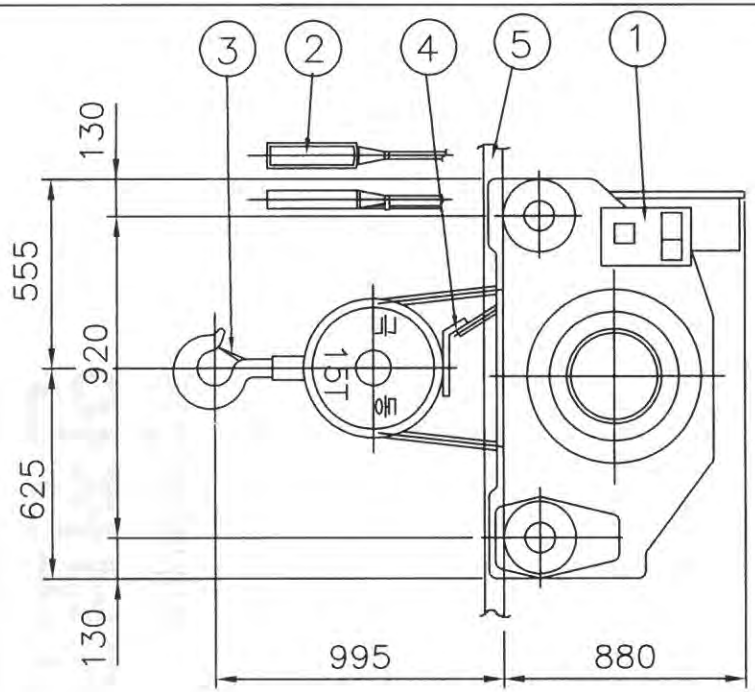

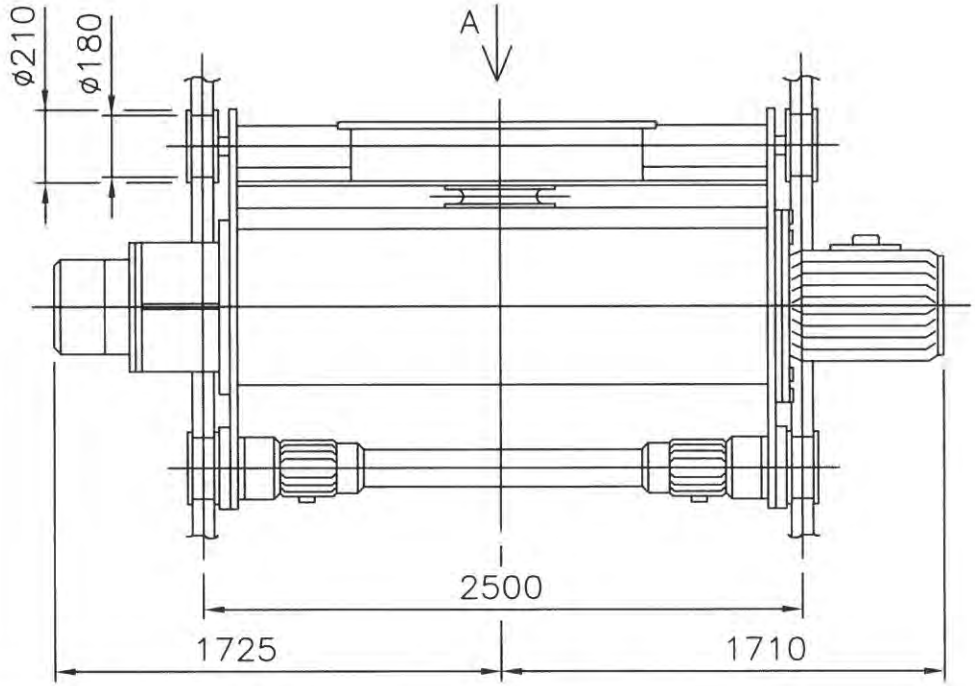

SPECIFICATION			
HOISTING LOAD			15 TON
TESTING LOAD			18.75 TON
LIFT			30 M
HOISTING	HIGH	SPEED	4.5 M/MIN
		MOTOR	13 KW x 8P
	LOW	SPEED	3 M/MIN
		MOTOR	8.5 KW x 12P
TRAVERS-ING	HIGH	SPEED	15 M/MIN
		MOTOR	1.5 KW x 4 P (2UNIT)
	LOW	SPEED	10 M/MIN
		MOTOR	1.0 KW x 6 P (2UNIT)
	DUAL HIGH	SPEED	15/7.5 M/MIN
		MOTOR	1.5/0.75KWx4/8P (2UNIT)
	DUAL LOW	SPEED	10/5 M/MIN
		MOTOR	1.0/0.5KWx6/12P (2UNIT)
WIRE ROPE			(6x29 IWRC) ø18 x 4 FALLS
POWER SOURCE			AC3ø 220/380/ 440/460/480V 60Hz
TRAVERSING RAIL			22 KG/M
GROSS WEIGHT			2250 KG

극동 호이스트
제한하중
15000 K

VIEW A

NO.	DESCRIPTION	MT'L	SUB	TOTAL	SUB	TOTAL	REMARKS.
			QT'Y		WEIGHT(Kg)		
5	T/S RAIL	–		–			22KG/M
4	UPPER LIMIT S/W	SS400		1			
3	SAFETY LATCH	SPC		1			
2	EMERGENCY S/W	–		1			
1	LOAD LIMITER	–		1			

PROJECT		DATE	DIM
			mm
TITLE	KD15 – L30 – D ARRANGEMENT DRAWING FOR HOIST	SCALE	PROJECTION
		A3/20	3rd

DRAWN	DESIGNED	CHECKED	APPROVED	REF. DRAWING

극동호이스트 주식회사
KUK DONG HOIST CO., LTD.

SHEET No.

DWG No. KD15D3000

불법복제 및 배포금지

192.168.11.51 / 2019-05-21 13:51:47

ELECTRICAL SPECIFICATION

. POWER SOURCE : AC 3Φ 220V, 380V, 440V ,460V,480V 60Hz

. CONTROL SOURCE : AC 1Φ 110V ,120V 60Hz

OBJECT		MOTOR OUTPUT	220V		380V		440V	460V	480V	440,460,480V	BRAKE	REMARK
			STATOR CURRENT	1st CABLE SIZE	STATOR CURRENT	1st CABLE SIZE	STATOR CURRENT	STATOR CURRENT	STATOR CURRENT	1st CABLE SIZE		
MAIN HOIST	HIGH	13KW x 8P 30 MIN	59.00 A	25.0 sq	34.20 A	16.0 sq	29.5 A	28.4 A	27.2 A	10.0 sq	DC MAG. BRAKE	
	LOW	8.5KW x 12P 30 MIN	58.60 A	25.0 sq	33.90 A	16.0 sq	29.3 A	28.1 A	26.9 A	10.0 sq	DC MAG. BRAKE	
TRAVERSING	HIGH	1.5KW x 4P 30 MIN	7.30 A	4.0 sq	4.20 A	4.0 sq	3.70 A	3.50 A	3.40 A	4.0 sq	DC MAG. BRAKE	1 DRIVE
	LOW	1.0KW x 6P 30 MIN	6.70 A	4.0 sq	3.90 A	4.0 sq	3.30 A	3.20 A	3.10 A	4.0 sq	DC MAG. BRAKE	1 DRIVE
CONTROL CIRCUIT			2 A	2.5 sq	2 A	2.5 sq	2 A	2 A	2 A	2.5 sq		
LIGHTING & ACC'Y CIRCUIT												
SUB TOTAL (PEAK LOAD)		HIGH	68.30 A	25.0 sq	40.40 A	16.0 sq	35.20 A	33.90 A	32.60 A	10.0 sq	I(A)=M/H + T/S + ASS'Y	
SUB TOTAL (NORMAL LOAD)		LOW	67.30 A	25.0 sq	39.80 A	16.0 sq	34.60 A	33.30 A	32.00 A	10.0 sq	I(A)=M/H + T/S + ASS'Y	

*. 위 계산은 HIGH(MAX.)일때와 LOW(MIN.)일때만 계산한것임.

*. 위 계산은 LIFT 12(18,24)M에 적용.

192.168.11.51 / 2019-05-21 13:51:47

불법복제 및 배포금지

ELECTRICAL SPECIFICATION

. POWER SOURCE : AC 3Φ 220V, 380V, 440V,460V,480V 60Hz

. CONTROL SOURCE : AC 1Φ 110V, 120V 60Hz

OBJECT		MOTOR OUTPUT	220V		380V		440V	460V	480V	440,460,480V	BRAKE	REMARK
			STATOR CURRENT	1st CABLE SIZE	STATOR CURRENT	1st CABLE SIZE	STATOR CURRENT	STATOR CURRENT	STATOR CURRENT	1st CABLE SIZE		
MAIN HOIST	HIGH	13KW x 8P 30 MIN	59.00 A	25.0 sq	34.20 A	16.0 sq	29.5 A	28.4 A	27.2 A	10.0 sq	DC MAG. BRAKE	
	LOW	8.5KW x 12P 30 MIN	58.60 A	25.0 sq	33.90 A	16.0 sq	29.3 A	28.1 A	26.9 A	10.0 sq	DC MAG. BRAKE	
TRAVERSING	HIGH	1.5KW x 4P 30 MIN	(7.3)*2	4.0 sq	(4.2)*2	4.0 sq	(3.7)*2	(3.5)*2	(3.4)*2	4.0 sq	DC MAG. BRAKE	2 DRIVE
	LOW	1.0KW x 6P 30 MIN	(6.7)*2	4.0 sq	(3.9)*2	4.0 sq	(3.3)*2	(3.2)*2	(3.1)*2	4.0 sq	DC MAG. BRAKE	2 DRIVE
CONTROL CIRCUIT			2 A	2.5 sq	2 A	2.5 sq	2 A	2 A	2 A	2.5 sq		
LIGHTING & ACC'Y CIRCUIT												
SUB TOTAL (PEAK LOAD)		HIGH	75.60 A	25.0 sq	44.60 A	16.0 sq	38.90 A	37.40 A	36.00 A	10.0 sq	I(A)=M/H + T/S + ASS'Y	
SUB TOTAL (NORMAL LOAD)		LOW	74.00 A	25.0 sq	43.70 A	16.0 sq	37.90 A	36.50 A	35.10 A	10.0 sq	I(A)=M/H + T/S + ASS'Y	

*. 위 계산은 HIGH(MAX.)일때와 LOW(MIN.)일때만 계산한것임.

*. 위 계산은 LIFT 30M에 적용.

192.168.11.51 / 2019-05-21 13:51:47

불법복제 및 배포금지

* MAIN POWER : AC 3PH 220V,380V,440V,460V,480 60Hz LIFT 12(18,24)M

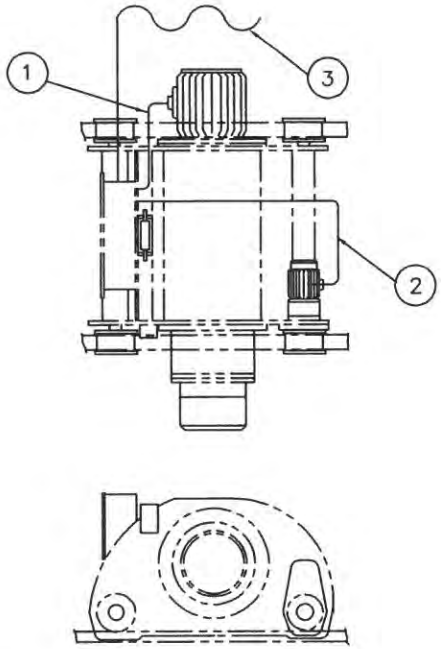

본 도면은 EARTH를 명기하기 위한 도면으로서
실제 배치와 다를 수 있으며 HOIST 본체와의
EARTH용 CABLE은 REFERENCE임

NO.	CABLE					REMARK
	TYPE	SIZE				
		220V	380V	TYPE	440V,460V,480V	
1	VCT	25sqx4c	16sqx5c	VCT	10sqx5c	HOISTING MOTOR WITH EARTH
2	VCT	4.0sqx4c+2.5sqx3c		VCT	4.0sqx4c+2.5sqx3c	T/S MOTOR WITH EARTH
3	VCT	25sqx4c	16sqx4c	VCT	10sqx4c	MAIN POWER WITH EARTH

MK	DATE	REVISIONS	CHK.	APP.
4				
3				
2				
1				

CUSTOMER		DRAWING	DESIGN	CHECKED	APPROVED	SCALE	DATE	ORDER NO.
DRAWING TITLE	GROUND WIRE SYSTEM					NONE		
		극동호이스트 주식회사 KUK DONG HOIST CO., LTD.				DWG. NO	KD15D-E001	

192.168.11.51 / 2019-05-21 13:51:47

불법복제 및 배포금지

* MAIN POWER : AC 3PH 220V,380V,440V,460V,480 60Hz (LIFT 30M)

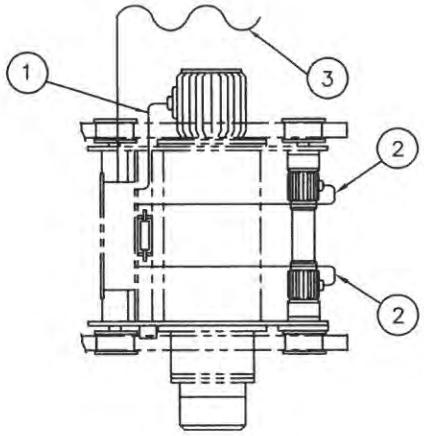

본 도면은 EARTH를 명기하기 위한 도면으로서
실제 배치와 다를 수 있으며 HOIST 본체와의
EARTH용 CABLE은 REFERENCE임

NO	CABLE					REMARK
	TYPE	SIZE				
		220V	380V	TYPE	440V,460V,480V	
1	VCT	25sqx4c	16sqx5c	VCT	10sqx5c	HOISTING MOTOR WITH EARTH
2	VCT	4.0sqx4c+2.5sqx3c		VCT	4.0sqx4c+2.5sqx3c	T/S MOTOR WITH EARTH
3	VCT	25sqx4c	16sqx4c	VCT	10sqx4c	MAIN POWER WITH EARTH

MK	DATE	REVISIONS	CHK.	APP.
4				
3				
2				
1				

CUSTOMER		DRAWING	DESIGN	CHECKED	APPROVED	SCALE	DATE	ORDER NO.
DRAWING TITLE	GROUND WIRE SYSTEM					NONE		
		극동호이스트 주식회사 KUK DONG HOIST CO., LTD.				DWG. NO	KD15D-E002	

불법복제 및 배포금지

192.168.11.51 / 2019-05-21 13:51:47

NO	DESCRIPTION	CABLE SIZE
1	MAIN EARTH LINE	USER SCOPE
2	POWER SOURCE	USER SCOPE
3	TROLLEY BAR	USER SCOPE
4	POWER SOURCE WITH EARTH	USER SCOPE
5	HOIST POWER SOURCE WITH EARTH	220V : VCT 25.0SQ x 1C 380V : VCT 16.0SQ x 1C 440, 460, 480V : VCT 10.0SQ x 1C
6	HOISTING MOTOR WITH EARTH	220V : VCT 25.0SQ x 1C 380V : VCT 16.0SQ x 1C 440, 460, 480V : VCT 10.0SQ x 1C
7	TRAVERSING MOTOR WITH EARTH	VCT 4.0SQ x 1C

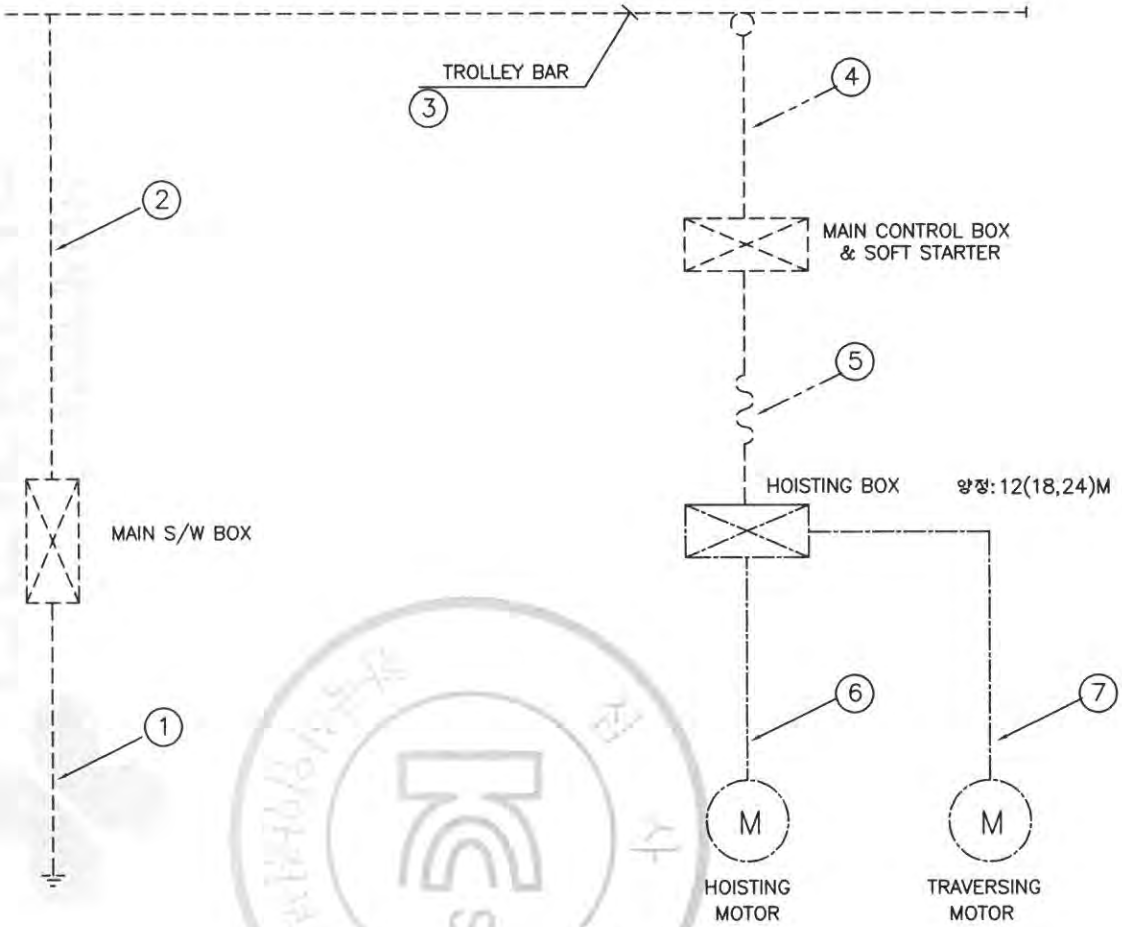

등전위접지

1.전기장비와 기계의 노출된 모든 도전부는 보호본딩회로에 연결되어야 하며 적절한 접지연속성 기능이 유지되어야함.

2. 보호본딩회로에는 개폐기, 과전류보호장치가 부착되지 않아야 한다.

시험대상 전선의 최소 유효단면적	최고전압강하(V)
1.0	3.3
1.5	2.6
2.5	1.6
4.0	1.4
>6.0	1.0

---------- USER SCOPE

———— KUKDONG SCOPE

MK	DATE	REVISIONS	CHK.	APP.
4				
3				
2				
1				

CUSTOMER		DRAWING	DESIGN	CHECKED	APPROVED	SCALE	DATE	ORDER NO.
DRAWING TITLE	EARTH DETAILS DRAWING					NONE	2003.07.01	
		극동호이스트 주식회사 KUK DONG HOIST CO., LTD.				DWG. NO	KD15-EC000	

불법복제 및 배포금지

192.168.11.51 / 2019-05-21 13:51:47

NO	DESCRIPTION	CABLE SIZE
1	MAIN EARTH LINE	USER SCOPE
2	POWER SOURCE	USER SCOPE
3	TROLLEY BAR	USER SCOPE
4	POWER SOURCE WITH EARTH	USER SCOPE
5	HOIST POWER SOURCE WITH EARTH	220V : VCT 25.0SQ x 1C 380V : VCT 16.0SQ x 1C 440, 460, 480V : VCT 10.0SQ x 1C
6	HOISTING MOTOR WITH EARTH	220V : VCT 25.0SQ x 1C 380V : VCT 16.0SQ x 1C 440, 460, 480V : VCT 10.0SQ x 1C
7	TRAVERSING MOTOR WITH EARTH	VCT 4.0SQ x 1C

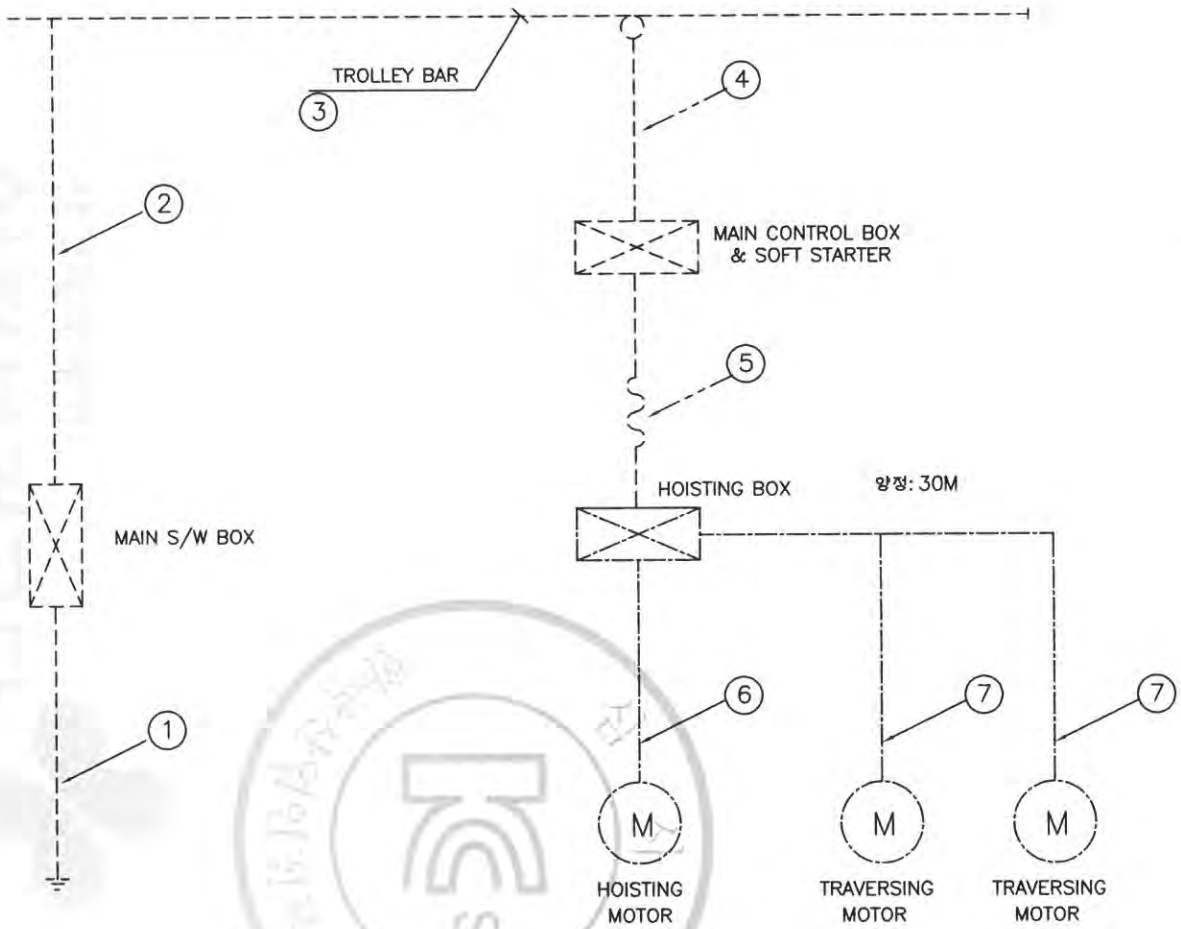

등전위접지

1.전기장비와 기계의 노출된 모든 도전부는 보호본딩회로에 연결되어야 하며 적절한 접지연속성 기능이 유지되어야함.

2. 보호본딩회로에는 개폐기, 과전류보호장치가 부착되지 않아야 한다.

시험대상 전선의 최소 유효단면적	최고전압강하(V)
1.0	3.3
1.5	2.6
2.5	1.6
4.0	1.4
>6.0	1.0

---------- USER SCOPE

———————— KUKDONG SCOPE

MK	DATE	REVISIONS	CHK.	APP.
4				
3				
2				
1				

CUSTOMER		DRAWING	DESIGN	CHECKED	APPROVED	SCALE	DATE	ORDER NO.
DRAWING TITLE	EARTH DETAILS DRAWING					NONE	2010.03.05	
		극동호이스트 주식회사 KUK DONG HOIST CO., LTD.				DWG. NO	KD15-EC001	

불법복제 및 배포금지

192.168.11.51 / 2019-05-21 13:51:47

192.168.11.51 / 2019-05-21 13:51:47

불법복제 및 배포금지

ADR'S NO.

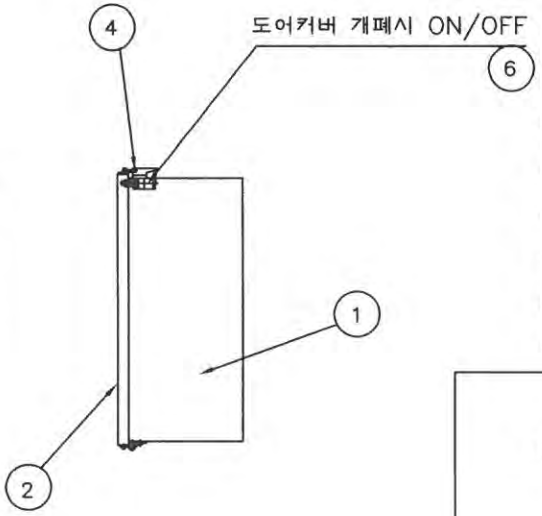

NO	DESCRIPTION	MT'L	REMARKS
1	PANEL CASE	SPC	1.6t
2	PANEL COVER	SPC	1.6t
3	HINGE	PUR'	
4	CLAMP	PUR'	
5	SPONGE	PUR'	
6	MIRCO S/W	PUR'	도어커버 개폐시 ON/OFF

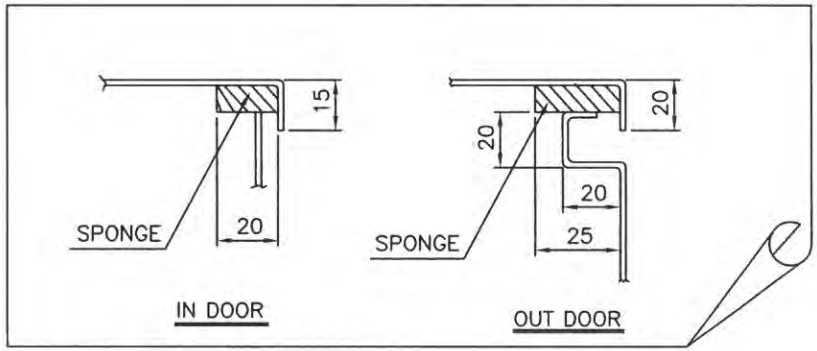

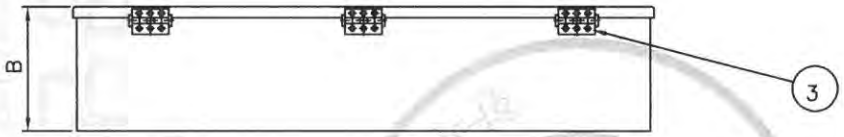

NOTE

1.PROTECTION DEGREE ;
A, INDOOR TYPE : DUST PROOF
B, OUT DOOR TYPE : SPLASH PROOF
2.FINAL PAINTING COLOR (MUNSELL NO.)
A. IN SIDE : 10B 3/5
B. OUT SIDE : 10B 3/5
3.PAINTING THICKNESS :ABOVE 40 um
4.APPLICATION VOLTAGE : 220V,380V,440V,460V,480V
5.제어용 전선 :1.5sq KIV,HIV
6.외함 개방구조는 다음과 같다.
1) 외함 개방시 충전부분이 차단되도록 한다.
2) 외함 개방 후 충전되어있는 부분은 IP2X 이상의 직접접촉 방호가 되어있을것.

SELECTION	HOIST CAPACITY	DESCRIPTION	IN DOOR			OUT DOOR			REMARK
			A	B	L	A	B	L	
☞	15 TON	NORMAL	650	220	850	650	220	850	
	15 TON	CREEP	650	220	850	650	220	850	

MK	DATE	REVISIONS	CHK.	APP.
4				
3				
2				
1				

CUSTOMER	
DRAWING TITLE	HOISTING CONTROL BOX LAY-OUT

DRAWING	DESIGN	CHECKED	APPROVED	SCALE	DATE	ORDER NO.
				NONE		

극동호이스트 주식회사
KUK DONG HOIST CO., LTD.

DWG. NO KD15EB00

1	2	3	4	5	6	7	8	9	10	11	12	13	14	15	16	17	18	19	20

POWER CIRCUIT

TRAVELLING POWER SUPPLY SYSTEM

ADR'S NO. A1

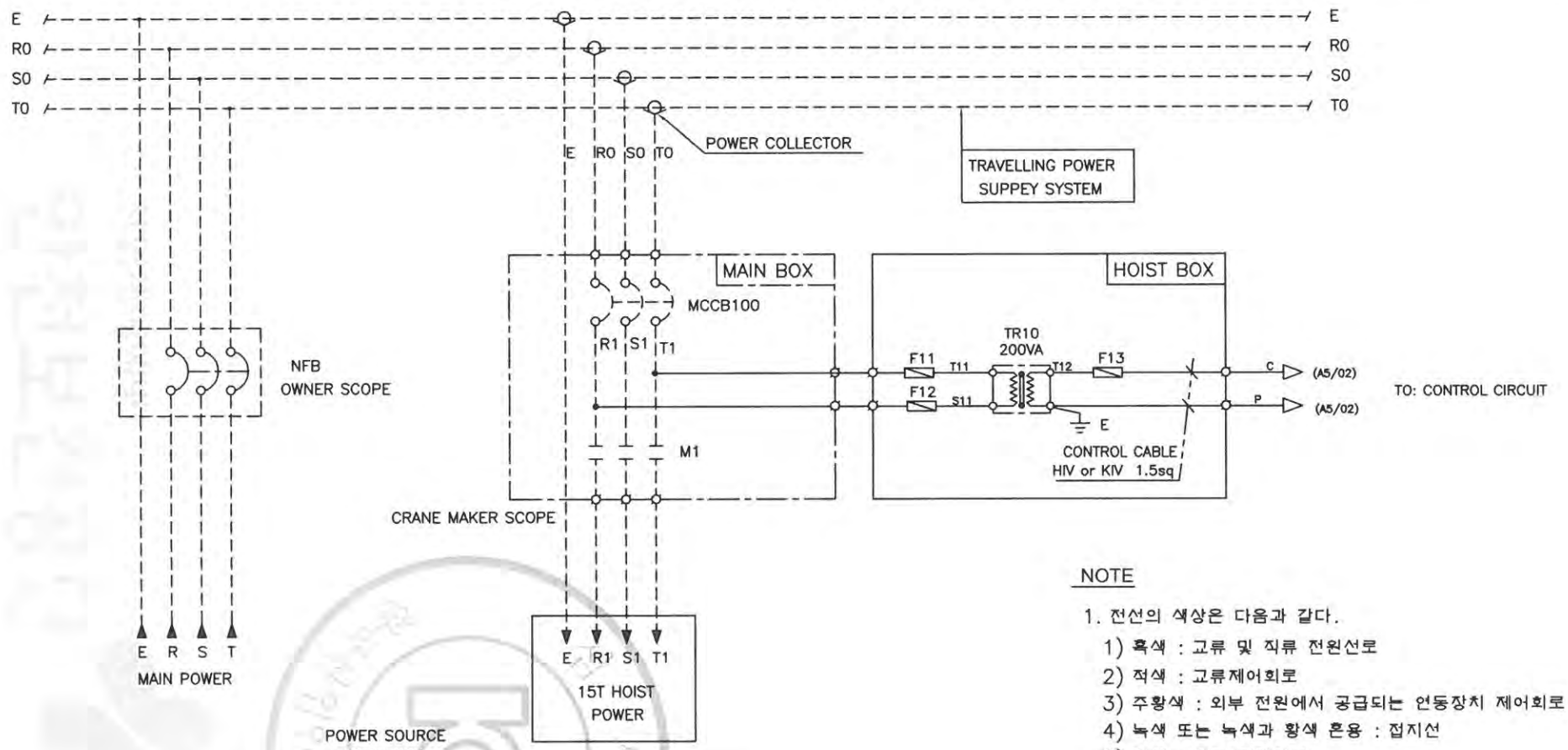

POWER SOURCE
AC 3ø 60Hz

SELECTION	VOLTAGE	F11 F12	F13	MCCB100	TR10
	220V	3A	5A	103AF/100AT	220/110,120V 200VA
	380V	2A	5A	53AF/50AT	380/110,120V 200VA
	440V	2A	5A	53AF/40AT	440/110,120V 200VA
	460V	2A	5A	53AF/40AT	460/110,120V 200VA
	480V	2A	5A	53AF/40AT	480/110,120V 200VA

NOTE

1. 전선의 색상은 다음과 같다.
   1) 흑색 : 교류 및 직류 전원선로
   2) 적색 : 교류제어회로
   3) 주황색 : 외부 전원에서 공급되는 연동장치 제어회로
   4) 녹색 또는 녹색과 황색 혼용 : 접지선
   5) 청색 : 직류 제어선로
2. 제어용 전선 : 1.5mm KIV,HIV
3. 제작시 다소 변경 될수있음.
4. 외함 개방구조는 다음과 같을것.
   외함 개방후 충전되어있는 부분은 IP2X 이상의 직접 접촉 방호가 되어있을것.

MK	DATE	REVISIONS	CHK.	APP.	CUSTOMER		DRAWING	DESIGN	CHECKED	APPROVED	SCALE	DATE	ORDER NO.
					DRAWING TITLE	MAIN POWER CIRCUIT 1					NONE		
						DIAGRAM	극동호이스트 주식회사 KUK DONG HOIST CO., LTD.				DWG. NO	KD15E001	

192.168.11.51 / 2019-05-21 13:51:47

불법복제 및 배포금지

1	2	3	4	5	6	7	8	9	10	11	12	13	14	15	16	17	18	19	20.

ADR'S NO.

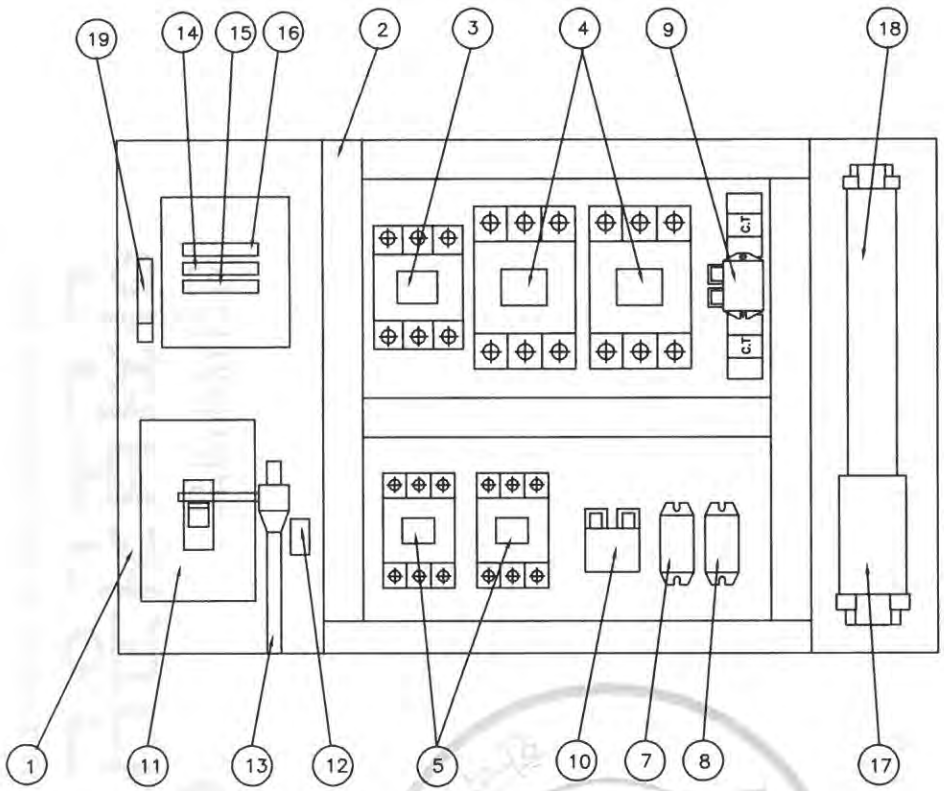

NO	DESCRIPTION	SPECIFICATION	Q'TY	REMARK
1	CHASSIS PLATE		1	아 연 도 금
2	CABLE DUCT	–	1	
3	MAGNET CONTACT	DMC85	1	M1, MAIN MAG.
4	MAGNET CONTACT	MC–185a	2	HOISTING
5	MAGNET CONTACT	DMC22b	2	TRAVERSING
7	SILICON RECTIFIER	SR–60	1	HOISTING
8	SILICON RECTIFIER	SR–30	1	TRAVERSING
9	E.O.C.R	SS–100	1	HOISTING
10	E.O.C.R	SS–30	1	TRAVERSING
11	MCCB100	103AF/100AT	1	LS–2
12	UPPER LIMIT	AC 600V/3A	1	LS–1
13	LIMIT LEVER	SS400	1	
14	FUSE (F11,F12)	3 A	2	
15	FUSE (F13)	5 A	1	
16	TRANSFORMER	220V/110,120V, 200VA	1	
17	TERMINAL BLOCK	100A,25A		
18	TERMINAL BLOCK	15A		
19	EARTH TERMINAL	5tx25x50	1	

– 주행 포함 시 3. MAIN MAG. 삭제 –

NOTE

1. UPPER LIMIT LS–1의 접점 허용 전류 용량. : AC 600V, 3A
2. UPPER LIMIT LS–2의 접점 허용 전류 용량. : NFB 103AF
3. EARTH TERMINAL RESISTANCE : 0.018 Ω
4. POWER SOURCE : AC. 3ø 220V 60HZ

NOTE

1. 전선의 색상은 다음과 같다.
   1) 흑색 : 고류 및 직류 전원선로
   2) 적색 : 고류제어회로
   3) 주황색 : 외부 전원에서 공급되는 연동장치 제어회로
   4) 녹색 또는 녹색과 황색 혼용 : 접지선
   5) 청색 : 직류 제어선로
2. CABLE MATERIAL : KIV OR EQUIVALENT, MIN SIZE : 1.5sq
3. 제어용 전선 : 1.5mm KIV,HIV
4. 제작시 다소 변경 될수있음.
5. 외함 개방구조는 다음과 같을것.
   1) 외함 개방시 충전부분이 차단되도록 할것.
   2) 외함 개방후 충전되어있는 부분은 IP2X 이상의 직접 접촉 방호가 되어있을것.

MK	DATE	REVISIONS	CHK.	APP.
4				
3				
2				
1				

CUSTOMER		DRAWING	DESIGN	CHECKED	APPROVED	SCALE	DATE	ORDER NO.
DRAWING TITLE	HOISTING CONTROL BOX					NONE		
	ARRANGEMENT DRAWING	극동호이스트 주식회사 KUK DONG HOIST CO., LTD.				DWG. NO	KD15BA21	

192.168.11.51 / 2019-05-21 13:51:47

불법복제 및 배포금지

1	2	3	4	5	6	7	8	9	10	11	12	13	14	15	16	17	18	19	20
POWER CIRCUIT																			ADR'S NO.
HOISTING MOTION										TRAVERSING MOTION									B1

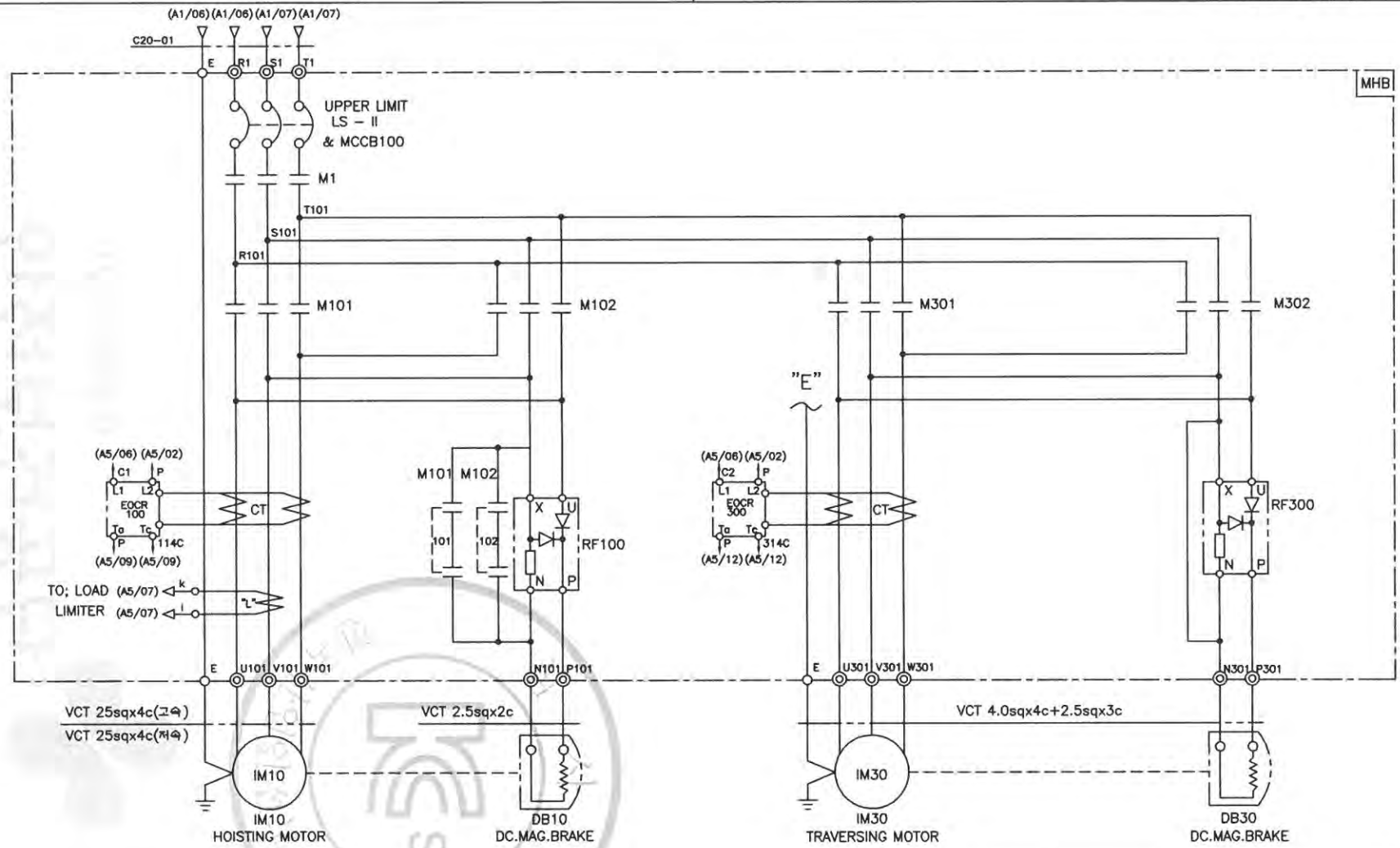

SPECIFICATION / SYMBOLS / DESCRIPTION	HOISTING POWER	HOISTING MOTOR	TRAVERSING MOTOR	DC.MAG' BRAKE	NO FUSE BREAKER	TRANSFORMER	FUSE		MAIN MAGNET	MAGNET CONTACTOR		UPPER LIMIT	ELECTRIC OVER CURRENT RELAY		SILICON RECTIFIER		LOAD LIMITER	CABLE
	HOIST	IM 10	IM 30	DB10, 30	LS - II & MCCB100	TR 1	F11,F12	F13	M1	M101,M102	M301,M302	LS-I	EOCR100	EOCR300	RF100	RF300	LOAD LIMITER	C20-01
	15TON AC3PH 220V 60Hz	13KW x 8P	1.5KW x 4P	DC 100V	ABS-103AF/100AT	220/110,120V,200VA	3A	5A	DMC85	MC-185a	DMC22b	AC 600V 3A	SS-100	SS-30	SR-60	SR-30	JDL-100	VCT 25sqx4c
	15TON AC3PH 220V 60Hz	8.5KWx12P	1.0KW x 6P	DC 100V	ABS-103AF/100AT	220/110,120V,200VA	3A	5A	DMC85	MC-180a	DMC22b	AC 600V 3A	SS-100	SS-30	SR-60	SR-30	JDL-100	VCT 25sqx4c
SELECTION / MAKER	KUKDONG				LS	SHINHAN	-		LS		DONG-A	KUKDONG	ASECO				JUNGHO	DONGIL

MK	DATE	REVISIONS	CHK.	APP.	CUSTOMER		DRAWING	DESIGN	CHECKED	APPROVED	SCALE	DATE	ORDER NO.
4													
3					DRAWING TITLE	HOISTING & T/S POWER CONTROL CIRCUIT DIAGRAM					NONE		
2							극동호이스트 주식회사 KUK DONG HOIST CO., LTD.				DWG. NO	KD15E21	
1													

192.168.11.51 / 2019-05-21 13:51:47

불법복제 및 배포금지

1	2	3	4	5	6	7	8	9	10	11	12	13	14	15	16	17	18	19	20

POWER CIRCUIT

ADR'S NO. B1

HOISTING MOTION | TRAVERSING MOTION

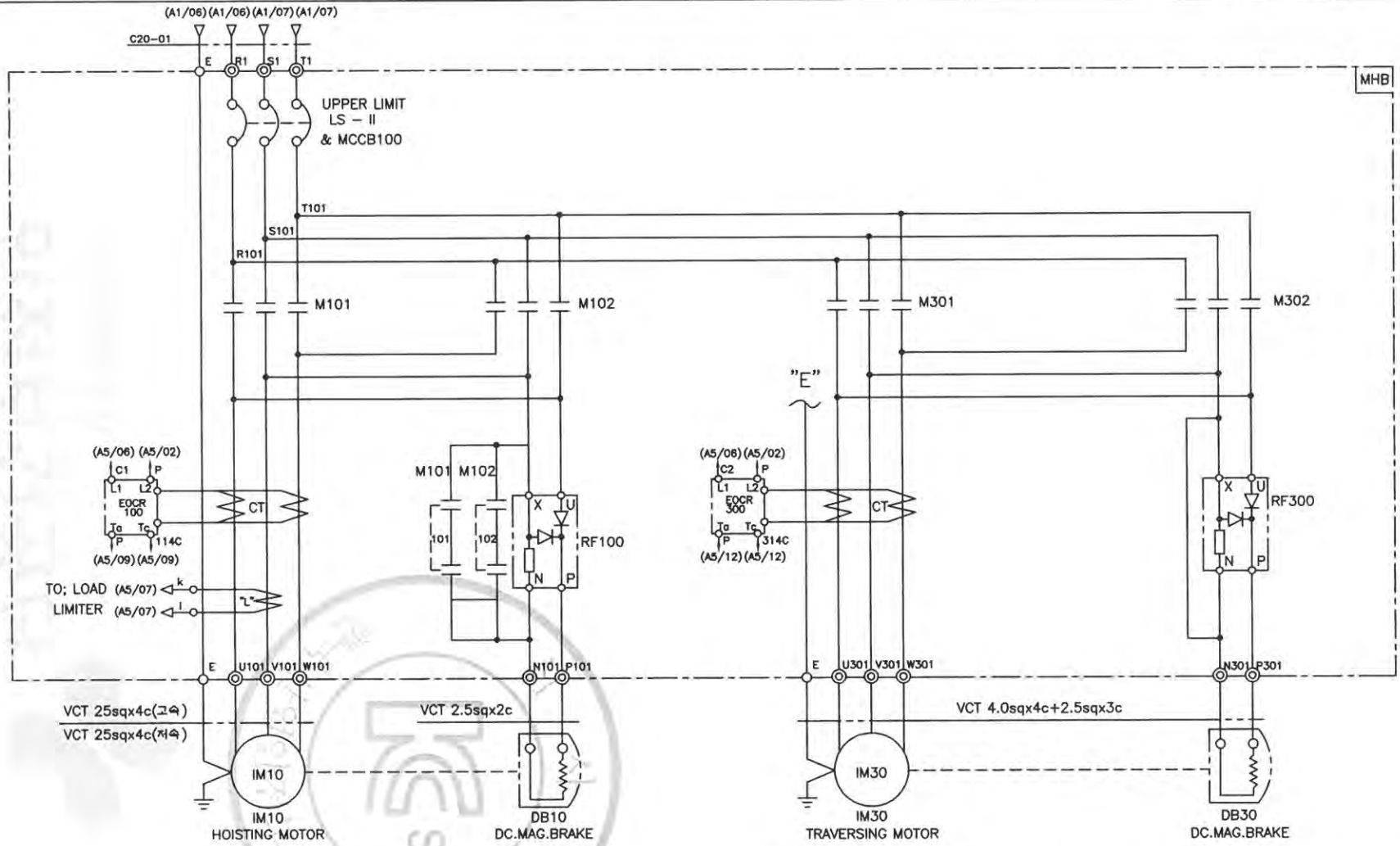

SPECIFICATION / SYMBOLS / DESCRIPTION	HOISTING POWER	HOISTING MOTOR	TRAVERSING MOTOR	DC.MAG' BRAKE	NO FUSE BREAKER	TRANSFORMER	FUSE		MAGNET CONTACTOR		UPPER LIMIT	ELECTRIC OVER CURRENT RELAY		SILICON RECTIFIER		LOAD LIMITER	CABLE
	HOIST	IM 10	IM 30	DB10, 30	LS - II & MCCB100	TR 1	F11,F12	F13	M101,M102	M301,M302	LS-I	EOCR100	EOCR300	RF100	RF300	LOAD LIMITER	C20-01
	15TON AC3PH 220V 60Hz	13KW x 8P	1.5KW x 4P	DC 100V	ABS-103AF/100AT	220/110,120V,200VA	3A	5A	MC-185a	DMC22b	AC 600V 3A	SS-100	SS-30	SR-60	SR-30	JDL-100	VCT 25sq x 4C
	15TON AC3PH 220V 60Hz	8.5KWx12P	1.0KW x 6P	DC 100V	ABS-103AF/100AT	220/110,120V,200VA	3A	5A	MC-185a	DMC22b	AC 600V 3A	SS-100	SS-30	SR-60	SR-30	JDL-100	VCT 25sq x 4C
SELECTION / MAKER	KUKDONG				LS	SHINHAN	-		LS	DONG-A	KUKDONG	ASECO				JUNGHO	DONGIL

MK	DATE	REVISIONS	CHK.	APP.
4				
3				
2				
1				

CUSTOMER		DRAWING	DESIGN	CHECKED	APPROVED	SCALE	DATE	ORDER NO.
DRAWING TITLE	HOISTING & T/S POWER CONTROL CIRCUIT DIAGRAM					NONE		
		극동호이스트 주식회사 KUK DONG HOIST CO., LTD.				DWG. NO	KD15E22	

192.168.11.51 / 2019-05-21 13:51:47

불법복제 및 배포금지

1	2	3	4	5	6	7	8	9	10	11	12	13	14	15	16	17	18	19	20
POWER CIRCUIT																			ADR'S NO.
HOISTING MOTION										TRAVERSING MOTION									B1

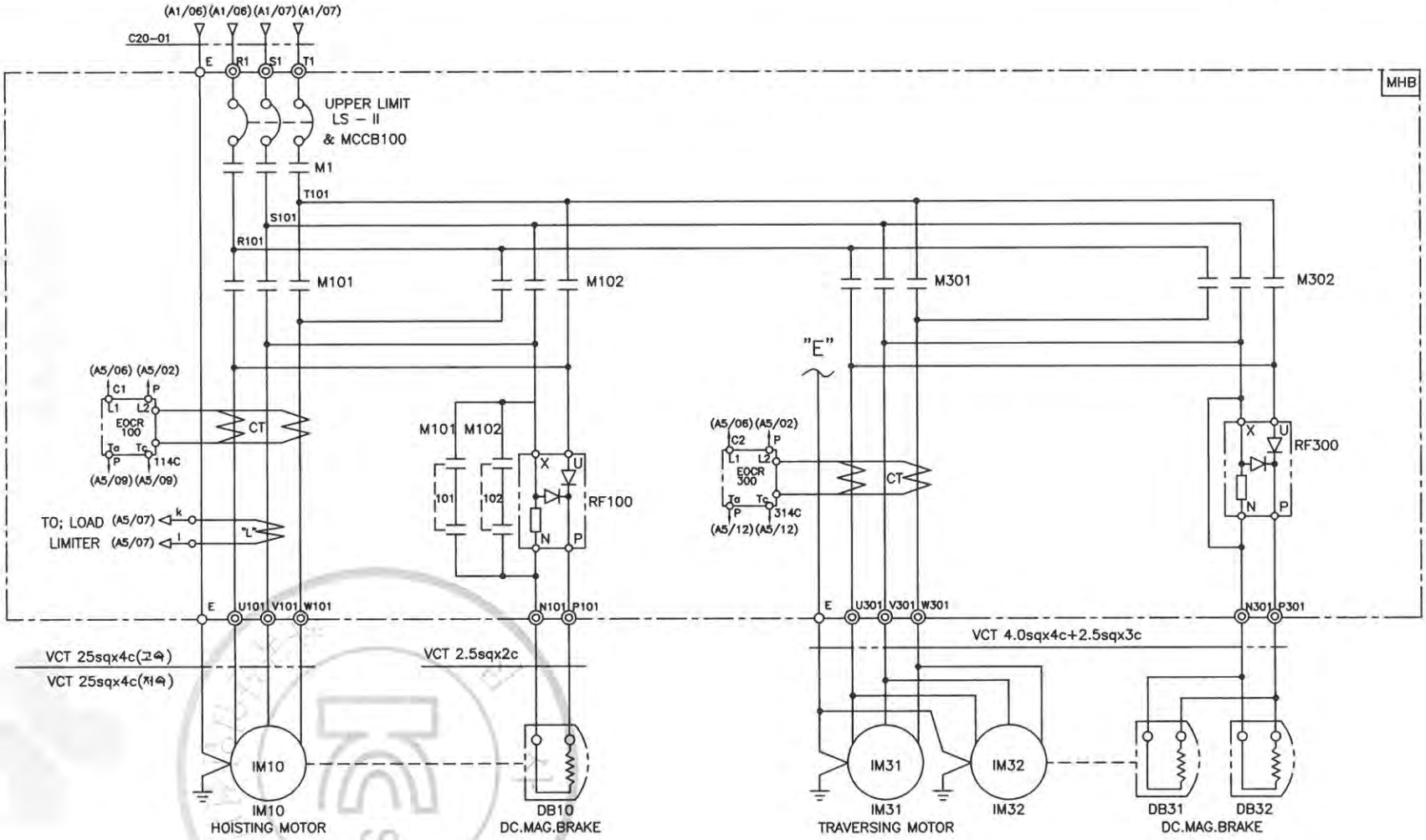

SPECIFICATION / SYMBOLS / DESCRIPTION	HOISTING POWER	HOISTING MOTOR	TRAVERSING MOTOR	DC.MAG' BRAKE	NO FUSE BREAKER	TRANSFORMER	FUSE		MAIN MAGNET	MAGNET CONTACTOR		UPPER LIMIT	ELECTRIC OVER CURRENT RELAY		SILICON RECTIFIER		LOAD LIMITER	CABLE
	HOIST	IM 10	IM 31,32	DB10,31,32	LS - II & MCCB100	TR 1	F11,F12	F13	M1	M101,M102	M301,M302	LS-I	EOCR100	EOCR300	RF100	RF300	LOAD LIMITER	C20-01
	15TON AC3PH 220V 60Hz	13KW x 8P	1.5KW x 4P	DC 100V	ABS-103AF/100AT	220/110,120V,200VA	3A	5A	DMC85	MC-185a	DMC22b	AC 600V 3A	SS-100	SS-30	SR-60	SR-30	JDL-100	VCT 25sq x 4C
	15TON AC3PH 220V 60Hz	8.5KWx12P	1.0KW x 6P	DC 100V	ABS-103AF/100AT	220/110,120V,200VA	3A	5A	DMC85	MC-185a	DMC22b	AC 600V 3A	SS-100	SS-30	SR-60	SR-30	JDL-100	VCT 25sq x 4C
SELECTION / MAKER	KUKDONG				LS	SHINHAN	-		DONG-A	LS	DONG-A	KUKDONG	ASECO				JUNGHO	DONGIL

MK	DATE	REVISIONS	CHK.	APP.
4				
3				
2				
1				

CUSTOMER		DRAWING	DESIGN	CHECKED	APPROVED	SCALE	DATE	ORDER NO.
DRAWING TITLE	HOISTING & T/S POWER CONTROL CIRCUIT DIAGRAM					NONE		
		극동호이스트 주식회사 KUK DONG HOIST CO., LTD.				DWG. NO	KD15E23	

불법복제 및 배포금지

192.168.11.51 / 2019-05-21 13:51:47

1	2	3	4	5	6	7	8	9	10	11	12	13	14	15	16	17	18	19	20
POWER CIRCUIT																			ADR'S NO.
HOISTING MOTION										TRAVERSING MOTION									B1

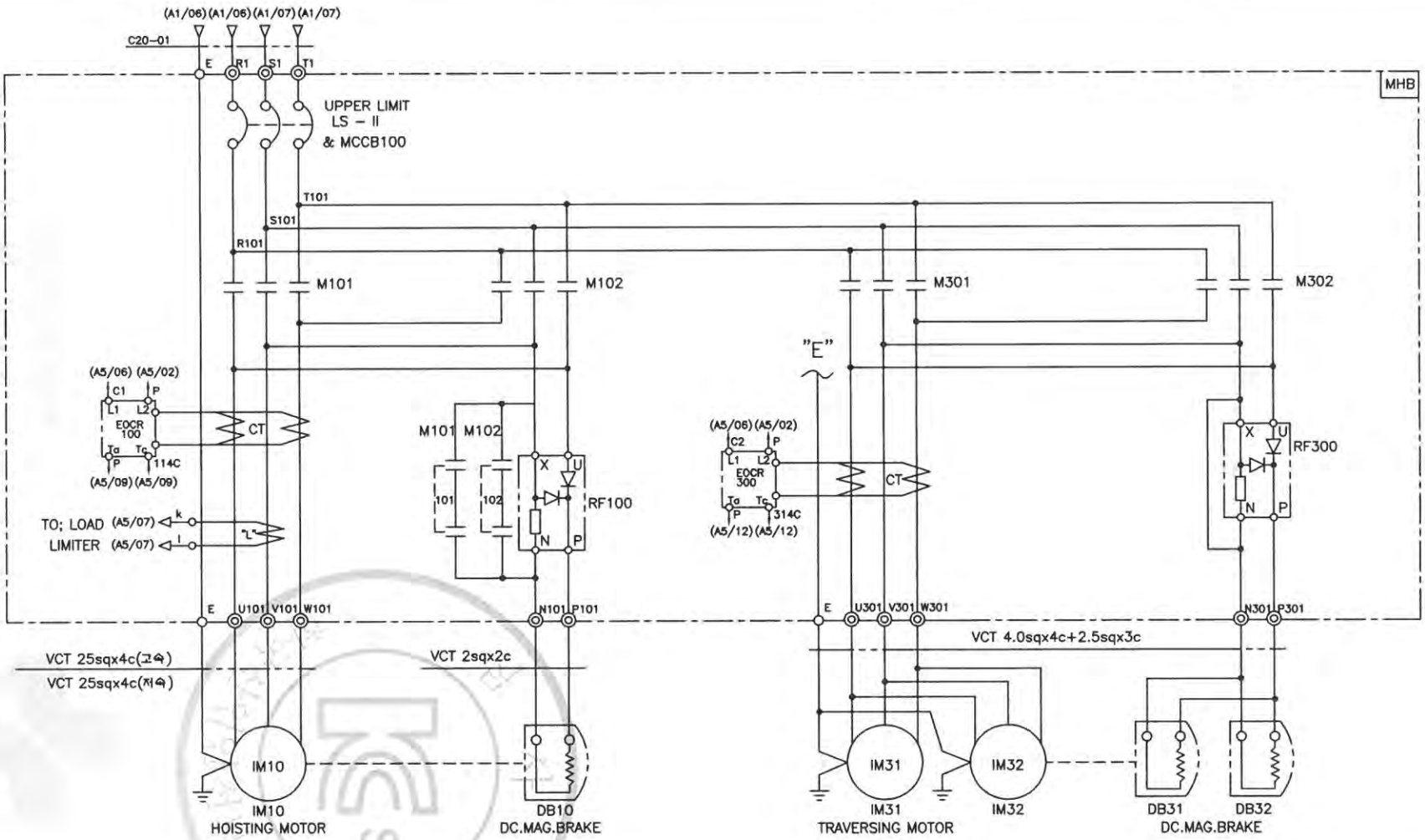

SPECIFICATION / SYMBOLS / DESCRIPTION	HOISTING POWER	HOISTING MOTOR	TRAVERSING MOTOR	DC.MAG BRAKE	NO FUSE BREAKER	TRANSFORMER	FUSE		MAGNET CONTACTOR		UPPER LIMIT	ELECTRIC OVER CURRENT RELAY		SILICON RECTIFIER		LOAD LIMITER	CABLE
	HOIST	IM 10	IM 31,32	DB10,31,32	LS - II & MCCB100	TR 1	F11,F12	F13	M101,M102	M301,M302	LS-I	EOCR100	EOCR300	RF100	RF300	LOAD LIMITER	C20-01
	15TON AC3PH 220V 60Hz	13KW x 8P	1.5KW x 4P	DC 100V	ABS-103AF/100AT	220/110,120V,200VA	3A	5A	MC-185a	DMC22b	AC 600V 3A	SS-100	SS-30	SR-60	SR-30	JDL-100	VCT 25sq x 4C
	15TON AC3PH 220V 60Hz	8.5KWx12P	1.0KW x 6P	DC 100V	ABS-103AF/100AT	220/110,120V,200VA	3A	5A	MC-185a	DMC22b	AC 600V 3A	SS-100	SS-30	SR-60	SR-30	JDL-100	VCT 25sq x 4C
SELECTION / MAKER	KUKDONG				LS	SHINHAN	-		LS	DONG-A	KUKDONG	ASECO				JUNGHO	DONGIL

MK	DATE	REVISIONS	CHK.	APP.
4				
3				
2				
1				

CUSTOMER		DRAWING	DESIGN	CHECKED	APPROVED	SCALE	DATE	ORDER NO.
DRAWING TITLE	HOISTING & T/S POWER CONTROL CIRCUIT DIAGRAM					NONE		
		극동호이스트 주식회사 KUK DONG HOIST CO., LTD.				DWG. NO	KD15E24	

192.168.11.51 / 2019-05-21 13:51:47

불법복제 및 배포금지

1	2	3	4	5	6	7	8	9	10	11	12	13	14	15	16	17	18	19	20
POWER CIRCUIT																			ADR'S NO.
TRAVERSING MOTION																			C2

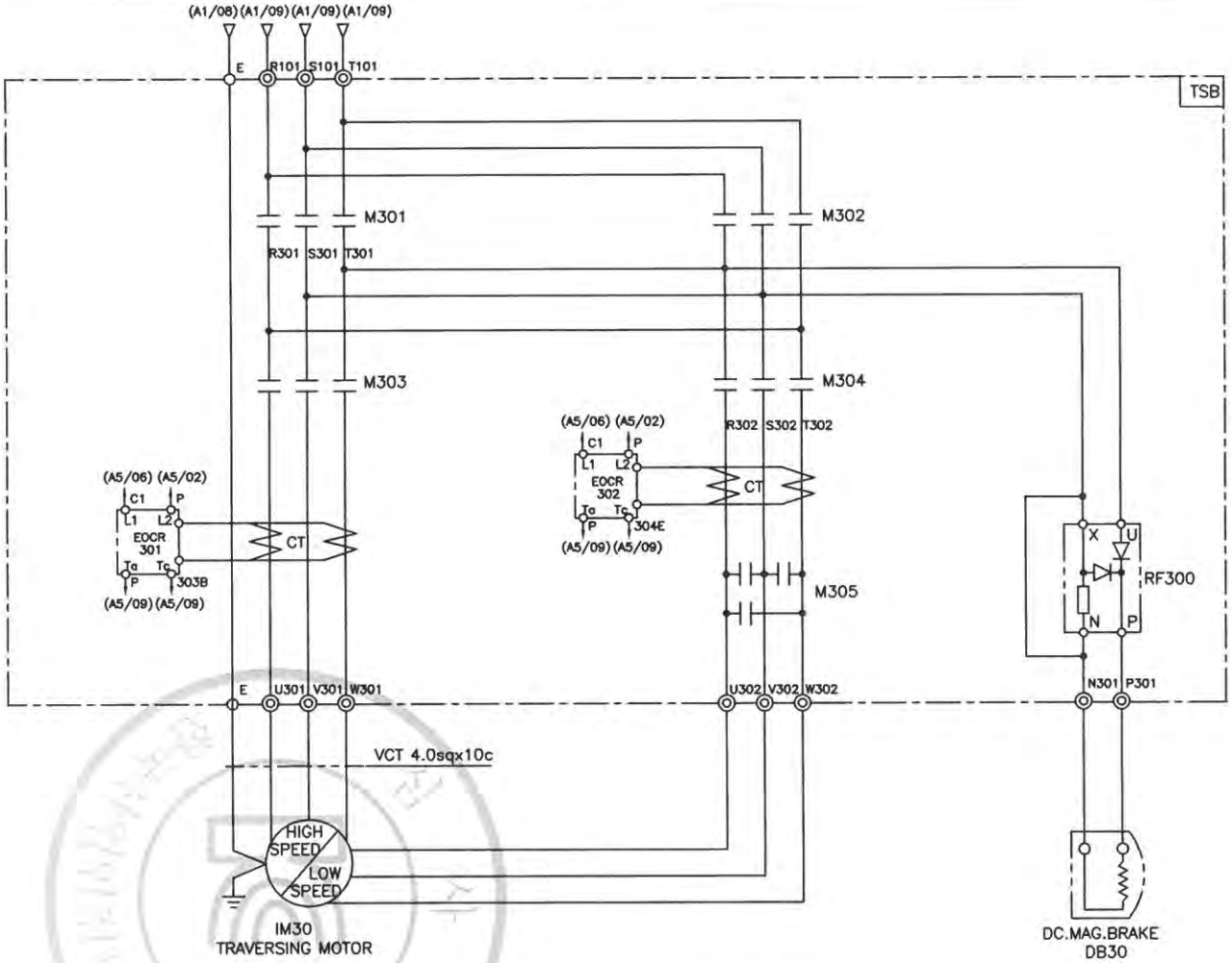

SPECIFICATION / SYMBOLS / DESCRIPTION		TRAVERSING MOTOR	DC MAG' BRAKE	MAGNET CONTACTOR		SILICON RECTIFIER	ELECTRIC OVER CURRENT RELAY
		IM 30	DB30	M301 , M302 , M303	M304 , M305	RF 300	EOCR 301,302
	220V	1.5/0.75KWx4/8P AC3PH 220V 60Hz	DC 100V	DMC22b	DMC22b	SR-30	SS-30
	220V	1.0/0.5KWx6/12P AC3PH 220V 60Hz	DC 100V	DMC22b	DMC22b	SR-30	SS-30
SELECTION / MAKER		KUKDONG		DONG-A		ASECO	

MK	DATE	REVISIONS	CHK.	APP.
4				
3				
2				
1				

CUSTOMER		DRAWING	DESIGN	CHECKED	APPROVED	SCALE	DATE	ORDER NO.
DRAWING TITLE	TRAVERSING POWER CONTROL CIRCUIT DIAGRAM					NONE		
		극동호이스트 주식회사 KUK DONG HOIST CO., LTD.				DWG. NO	KD15E25	

불법복제 및 배포금지

192.168.11.51 / 2019-05-21 13:51:47

1	2	3	4	5	6	7	8	9	10	11	12	13	14	15	16	17	18	19	20
POWER CIRCUIT																			ADR'S NO.
TRAVERSING MOTION																			C2

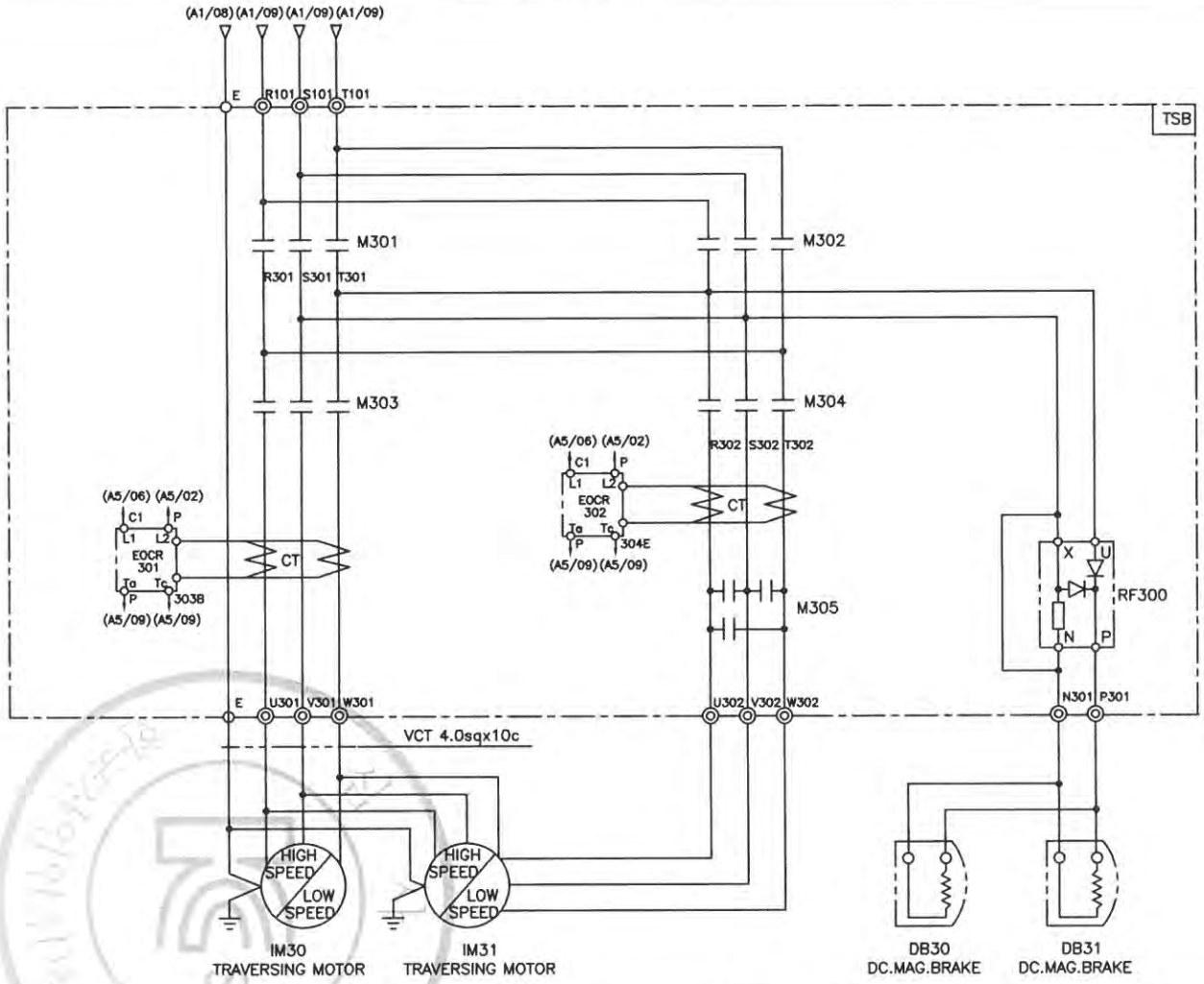

SPECIFICATION / SYMBOLS / DESCRIPTION		TRAVERSING MOTOR	DC MAG' BRAKE	MAGNET CONTACTOR		SILICON RECTIFIER	ELECTRIC OVER CURRENT RELAY
		IM 30 , 31	DB30 , 31	M301 , M302 , M303	M304 , M305	RF 300	EOCR 301,302
	220V	1.5/0.75KWx4/8P AC3PH 220V 60Hz	DC 100V	DMC22b	DMC22b	SR-30	SS-30
	220V	1.0/0.5KWx6/12P AC3PH 220V 60Hz	DC 100V	DMC22b	DMC22b	SR-30	SS-30
SELECTION MAKER		KUKDONG		DONG-A		ASECO	

MK	DATE	REVISIONS	CHK.	APP.	CUSTOMER		DRAWING	DESIGN	CHECKED	APPROVED	SCALE	DATE	ORDER NO.
					DRAWING TITLE	TRAVERSING POWER CONTROL CIRCUIT DIAGRAM					NONE		
							극동호이스트 주식회사 KUK DONG HOIST CO., LTD.				DWG. NO	KD15E26	

192.168.11.51 / 2019-05-21 13:51:47

불법복제 및 배포금지

1	2	3	4	5	6	7	8	9	10	11	12	13	14	15	16	17	18	19	20.

ADR'S NO.

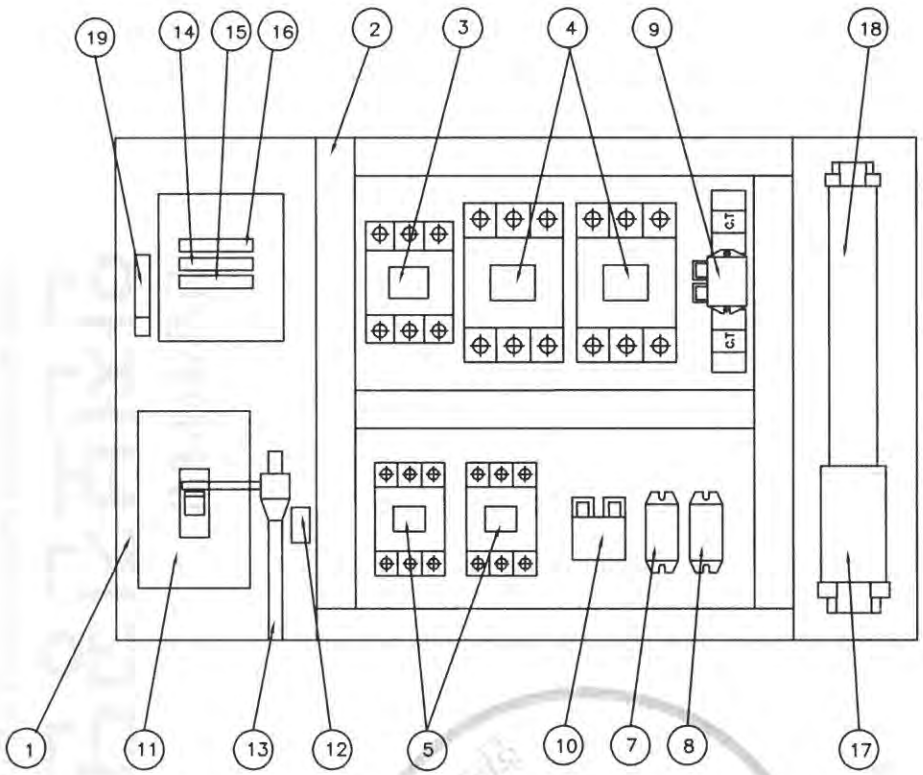

NO	DESCRIPTION	SPECIFICATION	Q'TY	REMARK
1	CHASSIS PLATE		1	아 연 도 금
2	CABLE DUCT	–	1	
3	MAGNET CONTACT	DMC50	1	M1, MAIN MAG.
4	MAGNET CONTACT	MC–100a	2	HOISTING
5	MAGNET CONTACT	DMC22b	2	TRAVERSING
7	SILICON RECTIFIER	SR–60	1	HOISTING
8	SILICON RECTIFIER	SR–30	1	TRAVERSING
9	E.O.C.R	SS–60	1	HOISTING
10	E.O.C.R	SS–05 (30M : SS–30)	1	TRAVERSING
11	MCCB100	53AF/50AT	1	LS–2
12	UPPER LIMIT	AC 600V/3A	1	LS–1
13	LIMIT LEVER	SS400	1	
14	FUSE (F11,F12)	2 A	2	
15	FUSE (F13)	5 A	1	
16	TRANSFORMER	380V/110,120V, 200VA	1	
17	TERMINAL BLOCK	60A,25A		
18	TERMINAL BLOCK	15A		
19	EARTH TERMINAL	5tx25x50	1	

– 주행 포함 시 3. MAIN MAG. 삭제 –

NOTE

1. UPPER LIMIT LS–1의 접점 허용 전류 용량. : AC 600V, 3A
2. UPPER LIMIT LS–2의 접점 허용 전류 용량. : NFB 53AF
3. EARTH TERMINAL RESISTANCE : 0.018 Ω
4. POWER SOURCE : AC. 3ø 380V 60HZ

NOTE

1. 전선의 색상은 다음과 같다.
   1) 흑색 : 교류 및 직류 전원선로
   2) 적색 : 교류제어회로
   3) 주황색 : 외부 전원에서 공급되는 연동장치 제어회로
   4) 녹색 또는 녹색과 황색 혼용 : 접지선
   5) 청색 : 직류 제어선로
2. CABLE MATERIAL : KIV OR EQUIVALENT, MIN SIZE : 1.5sq
3. 제어용 전선 : 1.5mm KIV,HIV
4. 제작시 다소 변경 될수있음.
5. 외함 개방구조는 다음과 같을것.
   1) 외함 개방시 충전부분이 차단되도록 할것.
   2) 외함 개방후 충전되어있는 부분은 IP2X 이상의 직접 접촉 방호가 되어있을것.

MK	DATE	REVISIONS	CHK.	APP.
4				
3				
2				
1				

CUSTOMER	
DRAWING TITLE	HOISTING CONTROL BOX ARRANGEMENT DRAWING

DRAWING	DESIGN	CHECKED	APPROVED	SCALE	DATE	ORDER NO.
				NONE		

극동호이스트 주식회사
KUK DONG HOIST CO., LTD.

DWG. NO KD15BA31

192.168.11.51 / 2019-05-21 13:51:47

불법복제 및 배포금지

1	2	3	4	5	6	7	8	9	10	11	12	13	14	15	16	17	18	19	20

POWER CIRCUIT

ADR'S NO. B1

HOISTING MOTION | TRAVERSING MOTION

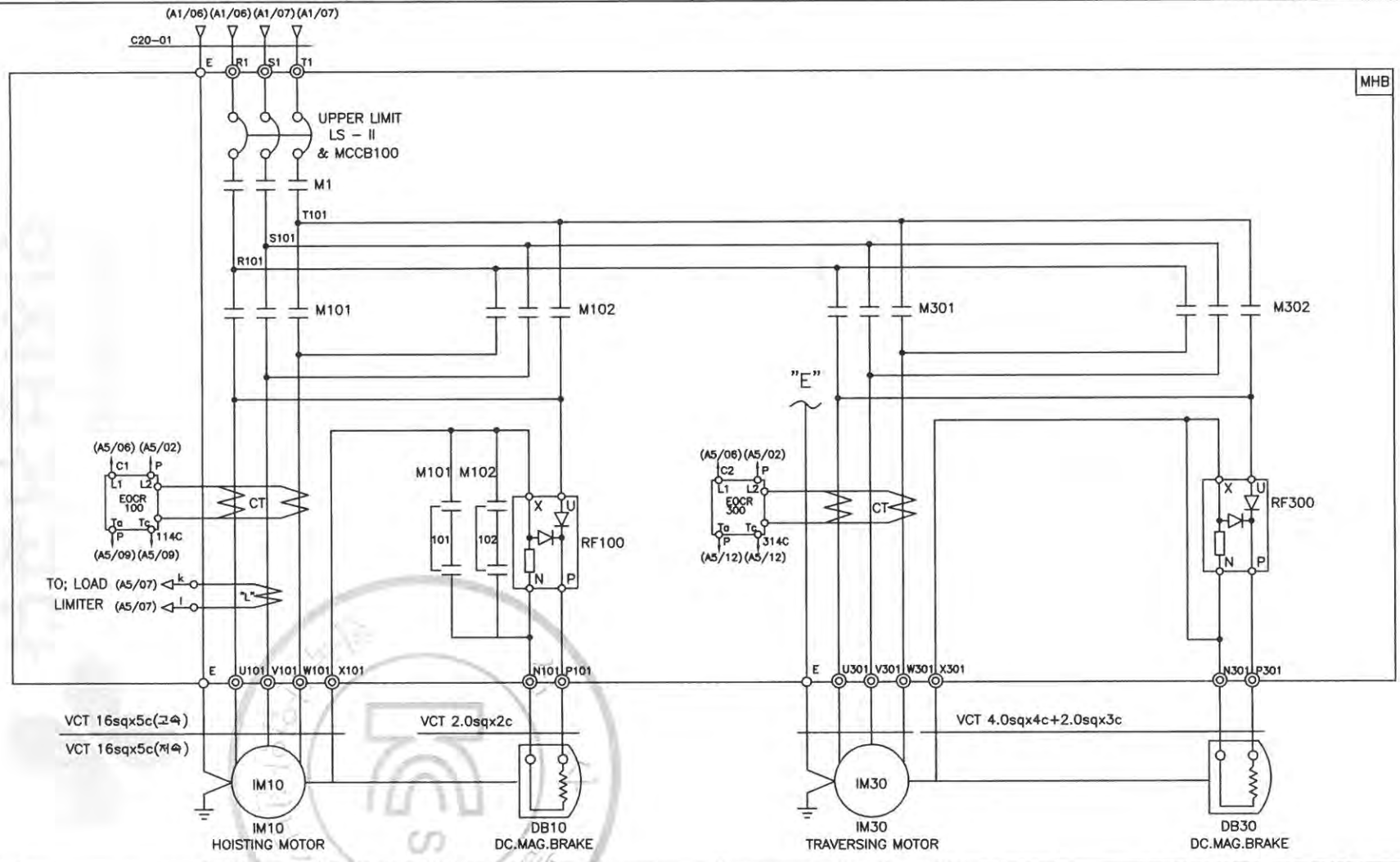

SPECIFICATION / SYMBOLS / DESCRIPTION	HOISTING POWER	HOISTING MOTOR	TRAVERSING MOTOR	DC.MAG' BRAKE	NO FUSE BREAKER	TRANSFORMER	FUSE		MAIN MAGNET	MAGNET CONTACTOR		UPPER LIMIT	ELECTRIC OVER CURRENT RELAY		SILICON RECTIFIER		LOAD LIMITER	CABLE
	HOIST	IM 10	IM 30	DB10, 30	LS-II & MCCB100	TR 1	F11,F12	F13	M1	M101,M102	M301,M302	LS-I	EOCR100	EOCR300	RF100	RF300	LOAD LIMITER	C20-01
	15TON AC3PH 380V 60Hz	13KW x 8P	1.5KW x 4P	DC 100V	ABS-53AF/50AT	380/110,120V,200VA	2A	3A	DMC50	MC-100a	DMC22b	AC 600V 3A	SS-60	SS-05	SR-60	SR-30	JDL-100	VCT 16sqx4c
	15TON AC3PH 380V 60Hz	8.5KW x 12P	1.0KW x 6P	DC 100V	ABS-53AF/50AT	380/110,120V,200VA	2A	3A	DMC50	MC-100a	DMC22b	AC 600V 3A	SS-60	SS-05	SR-60	SR-30	JDL-100	VCT 16sqx4c
SELECTION / MAKER	KUKDONG				LS	SHINHAN	–		DONG-A	LS	DONG-A	KUKDONG	ASECO				JUNGHO	DONGIL

MK	DATE	REVISIONS	CHK.	APP.
4				
3				
2				
1				

CUSTOMER

DRAWING TITLE: HOISTING & T/S POWER CONTROL CIRCUIT DIAGRAM

DRAWING	DESIGN	CHECKED	APPROVED	SCALE	DATE	ORDER NO.
				NONE		

극동호이스트 주식회사
KUK DONG HOIST CO., LTD.

DWG. NO KD15E31

192.168.11.51 / 2019-05-21 13:51:47

불법복제 및 배포금지

1	2	3	4	5	6	7	8	9	10	11	12	13	14	15	16	17	18	19	20
POWER CIRCUIT																			ADR'S NO.
HOISTING MOTION										TRAVERSING MOTION									B1

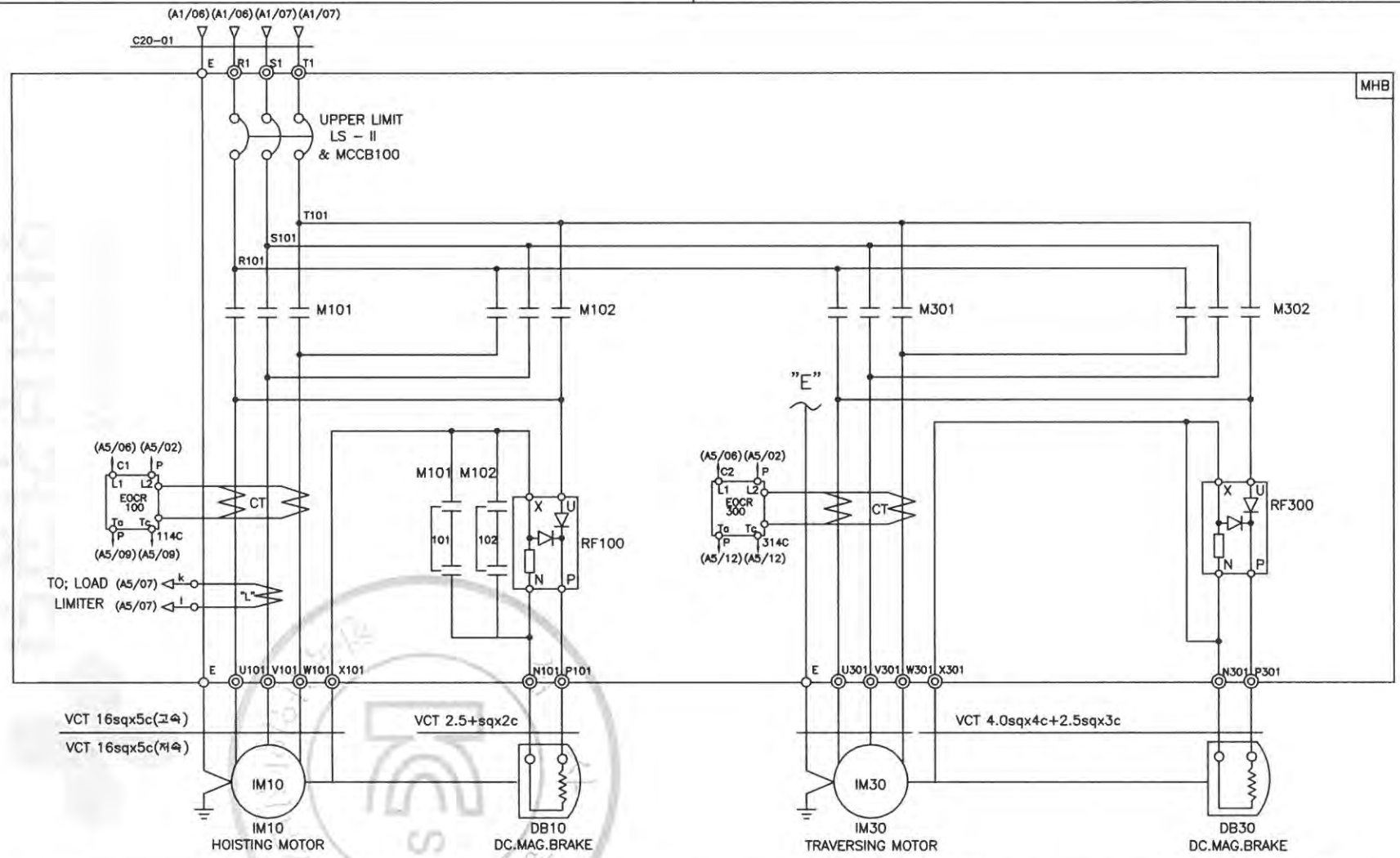

SPECIFICATION / SYMBOLS / DESCRIPTION	HOISTING POWER	HOISTING MOTOR	TRAVERSING MOTOR	DC.MAG' BRAKE	NO FUSE BREAKER	TRANSFORMER	FUSE		MAGNET CONTACTOR		UPPER LIMIT	ELECTRIC OVER CURRENT RELAY		SILICON RECTIFIER		LOAD LIMITER	CABLE
	HOIST	IM 10	IM 30	DB10, 30	LS-II & MCCB100	TR 1	F11,F12	F13	M101,M102	M301,M302	LS-I	EOCR100	EOCR300	RF100	RF300	LOAD LIMITER	C20-01
	15TON AC3PH 380V 60Hz	13KW x 8P	1.5KW x 4P	DC 100V	ABS-53AF/50AT	380/110,120V,200VA	2A	3A	MC-100a	DMC22b	AC 600V 3A	SS-60	SS-05	SR-60	SR-30	JDL-100	VCT 16sqx4c
	15TON AC3PH 380V 60Hz	8.5KW x 12P	1.0KW x 6P	DC 100V	ABS-53AF/50AT	380/110,120V,200VA	2A	3A	MC-100a	DMC22b	AC 600V 3A	SS-60	SS-05	SR-60	SR-30	JDL-100	VCT 16sqx4c
SELECTION / MAKER	KUKDONG				LS	SHINHAN	–		LS	DONG-A	KUKDONG	ASECO				JUNGHO	DONGIL

MK	DATE	REVISIONS	CHK.	APP.
4				
3				
2				
1				

CUSTOMER		DRAWING	DESIGN	CHECKED	APPROVED	SCALE	DATE	ORDER NO.
DRAWING TITLE	HOISTING & T/S POWER CONTROL CIRCUIT DIAGRAM					NONE		
		극동호이스트 주식회사 KUK DONG HOIST CO., LTD.				DWG. NO	KD15E32	

192.168.11.51 / 2019-05-21 13:51:47

불법복제 및 배포금지

1	2	3	4	5	6	7	8	9	10	11	12	13	14	15	16	17	18	19	20
POWER CIRCUIT																			ADR'S NO.
HOISTING MOTION										TRAVERSING MOTION									B1

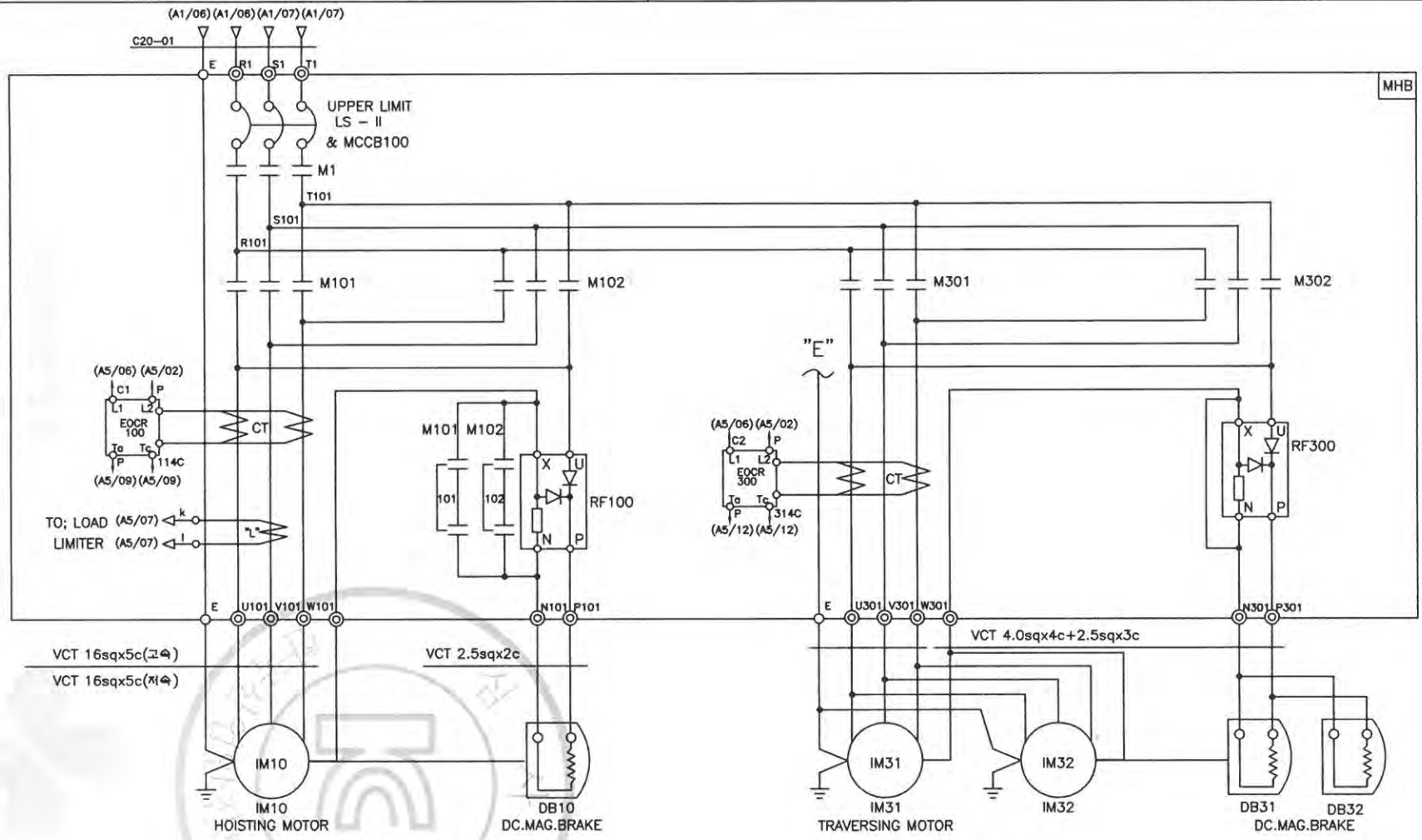

SPECIFICATION / SYMBOLS / DESCRIPTION	HOISTING POWER	HOISTING MOTOR	TRAVERSING MOTOR	DC.MAG' BRAKE	NO FUSE BREAKER	TRANSFORMER	FUSE		MAIN MAGNET	MAGNET CONTACTOR		UPPER LIMIT	ELECTRIC OVER CURRENT RELAY		SILICON RECTIFIER		LOAD LIMITER	CABLE
	HOIST	IM 10	IM 31,32	DB10,31,32	LS-II & MCCB100	TR 1	F11,F12	F13	M1	M101,M102	M301,M302	LS-I	EOCR100	EOCR300	RF100	RF300	LOAD LIMITER	C20-01
	15TON AC3PH 380V 60Hz	13KW x 8P	1.5KW x 4P	DC 100V	ABS-53AF/50AT	380/110,120V,200VA	2A	3A	DMC50	MC-100a	DMC22b	AC 600V 3A	SS-60	SS-30	SR-60	SR-30	JDL-100	VCT 16sqx4c
	15TON AC3PH 380V 60Hz	8.5KW x 12P	1.0KW x 6P	DC 100V	ABS-53AF/50AT	380/110,120V,200VA	2A	3A	DMC50	MC-100a	DMC22b	AC 600V 3A	SS-60	SS-30	SR-60	SR-30	JDL-100	VCT 16sqx4c
SELECTION / MAKER	KUKDONG				LS	SHINHAN	–		DONG-A	LS	DONG-A	KUKDONG	ASECO				JUNGHO	DONGIL

MK	DATE	REVISIONS	CHK.	APP.
4				
3				
2				
1				

CUSTOMER		DRAWING	DESIGN	CHECKED	APPROVED	SCALE	DATE	ORDER NO.
DRAWING TITLE	HOISTING & T/S POWER CONTROL CIRCUIT DIAGRAM					NONE		
		KD 극동호이스트 주식회사 KUK DONG HOIST CO., LTD.				DWG. NO	KD15E33	

192.168.11.51 / 2019-05-21 13:51:47

불법복제 및 배포금지

1	2	3	4	5	6	7	8	9	10	11	12	13	14	15	16	17	18	19	20
POWER CIRCUIT																			ADR'S NO.
HOISTING MOTION										TRAVERSING MOTION									B1

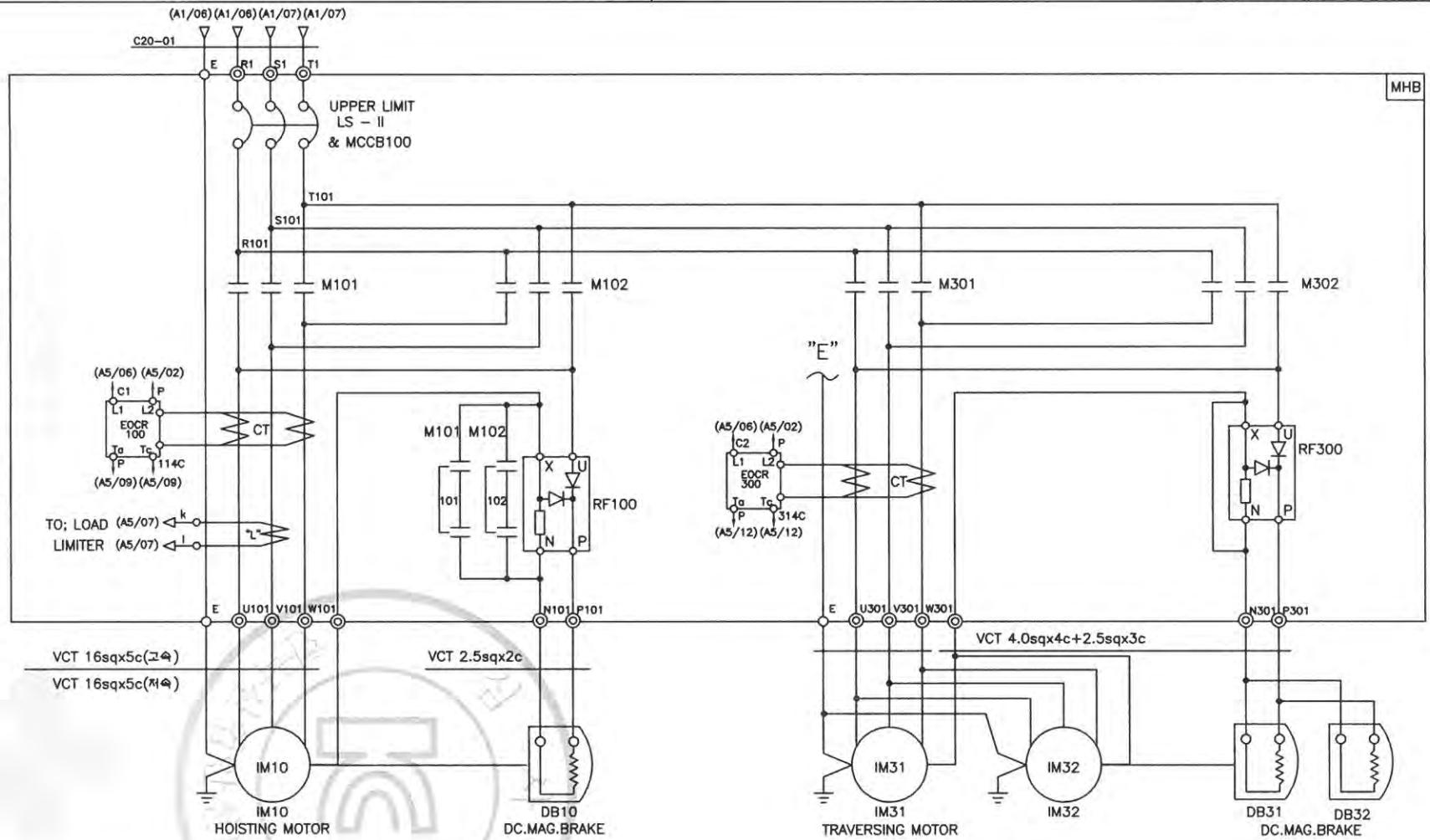

SPECIFICATION / SYMBOLS	HOISTING POWER	HOISTING MOTOR	TRAVERSING MOTOR	DC.MAG' BRAKE	NO FUSE BREAKER	TRANSFORMER	FUSE		MAGNET CONTACTOR		UPPER LIMIT	ELECTRIC OVER CURRENT RELAY		SILICON RECTIFIER		LOAD LIMITER	CABLE
DESCRIPTION	HOIST	IM 10	IM 31,32	DB10,31,32	LS-II & MCCB100	TR 1	F11,F12	F13	M101,M102	M301,M302	LS-I	EOCR100	EOCR300	RF100	RF300	LOAD LIMITER	C20-01
	15TON AC3PH 380V 60Hz	13KW x 8P	1.5KW x 4P	DC 100V	ABS-53AF/50AT	380/110,120V,200VA	2A	3A	MC-100a	DMC22b	AC 600V 3A	SS-60	SS-30	SR-60	SR-30	JDL-100	VCT 16sqx4c
	15TON AC3PH 380V 60Hz	8.5KW x 12P	1.0KW x 6P	DC 100V	ABS-53AF/50AT	380/110,120V,200VA	2A	3A	MC-100a	DMC22b	AC 600V 3A	SS-60	SS-30	SR-60	SR-30	JDL-100	VCT 16sqx4c
SELECTION / MAKER	KUKDONG				LS	SHINHAN	–		LS	DONG-A	KUKDONG	ASECO				JUNGHO	DONGIL

MK	DATE	REVISIONS	CHK.	APP.
4				
3				
2				
1				

CUSTOMER		DRAWING	DESIGN	CHECKED	APPROVED	SCALE	DATE	ORDER NO.
DRAWING TITLE	HOISTING & T/S POWER CONTROL CIRCUIT DIAGRAM					NONE		
		극동호이스트 주식회사 KUK DONG HOIST CO., LTD.				DWG. NO	KD15E34	

불법복제 및 배포금지

192.168.11.51 / 2019-05-21 13:51:47

1	2	3	4	5	6	7	8	9	10	11	12	13	14	15	16	17	18	19	20
POWER CIRCUIT																			ADR'S NO.
TRAVERSING MOTION																			C2

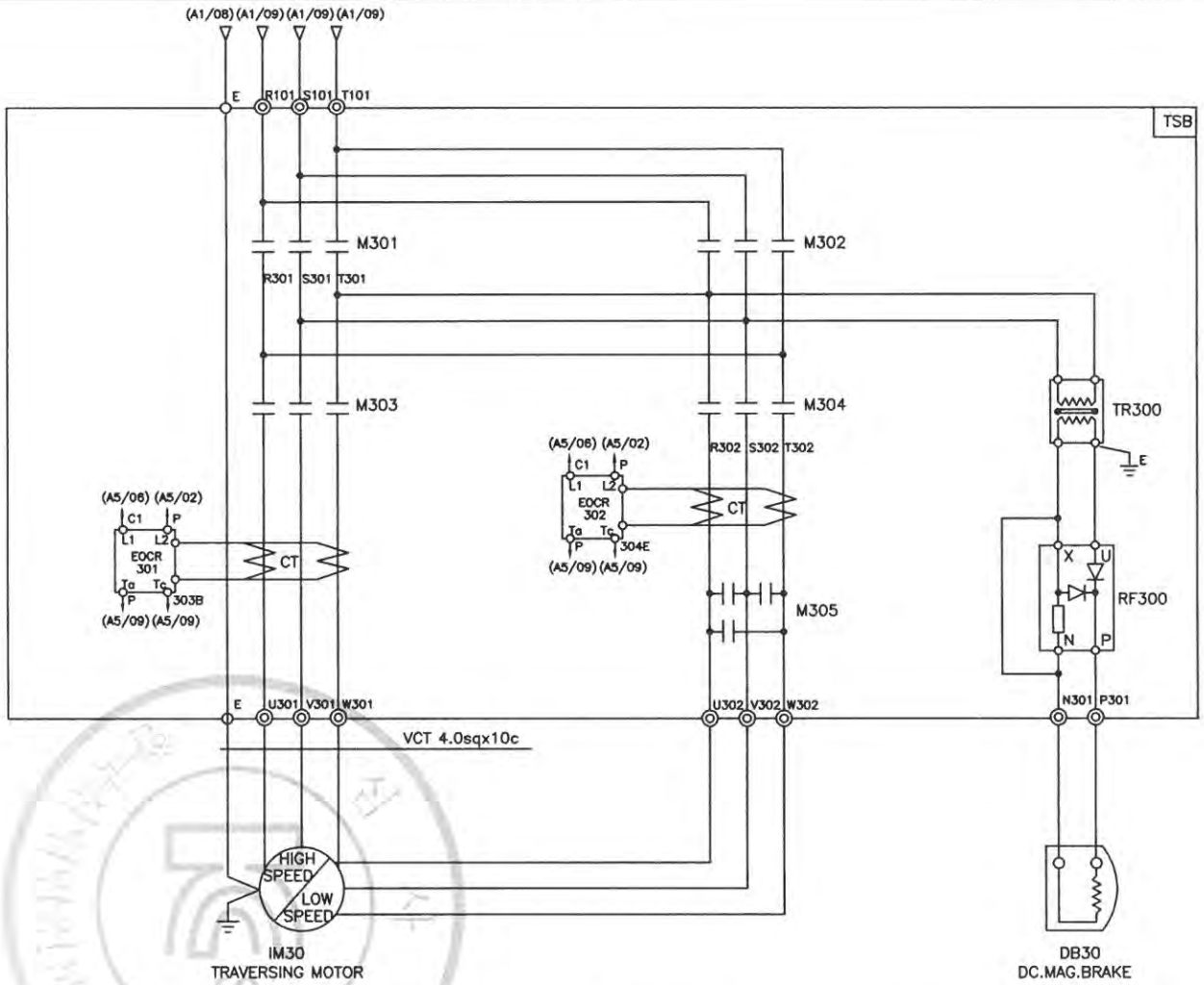

SPECIFICATION / SYMBOLS / DESCRIPTION		TRAVERSING MOTOR	DC MAG' BRAKE	MAGNET CONTACTOR		SILICON RECTIFIER	ELECTRIC OVER CURRENT RELAY	TRANSFORMER
		IM 30	DB30	M301 , M302 , M303	M304 , M305	RF 300	EOCR 301,302	TR300
	380V	1.5/0.75KWx4/8P AC3PH 380V 60Hz	DC 100V	DMC22b	DMC22b	SR-30	SS-05	AC380/220V, 300VA
	380V	1.0/0.5KWx6/12P AC3PH 380V 60Hz	DC 100V	DMC22b	DMC22b	SR-30	SS-05	AC380/220V, 300VA
SELECTION MAKER		KUKDONG		DONG-A		ASECO		SHINHAN

MK	DATE	REVISIONS	CHK.	APP.	CUSTOMER		DRAWING	DESIGN	CHECKED	APPROVED	SCALE	DATE	ORDER NO.
					DRAWING TITLE	TRAVERSING POWER CONTROL CIRCUIT DIAGRAM					NONE		
							KD 극동호이스트 주식회사 KUK DONG HOIST CO., LTD.				DWG. NO	KD15E35	

192.168.11.51 / 2019-05-21 13:51:47

불법복제 및 배포금지

1	2	3	4	5	6	7	8	9	10	11	12	13	14	15	16	17	18	19	20
POWER CIRCUIT																			ADR'S NO.
TRAVERSING MOTION																			C2

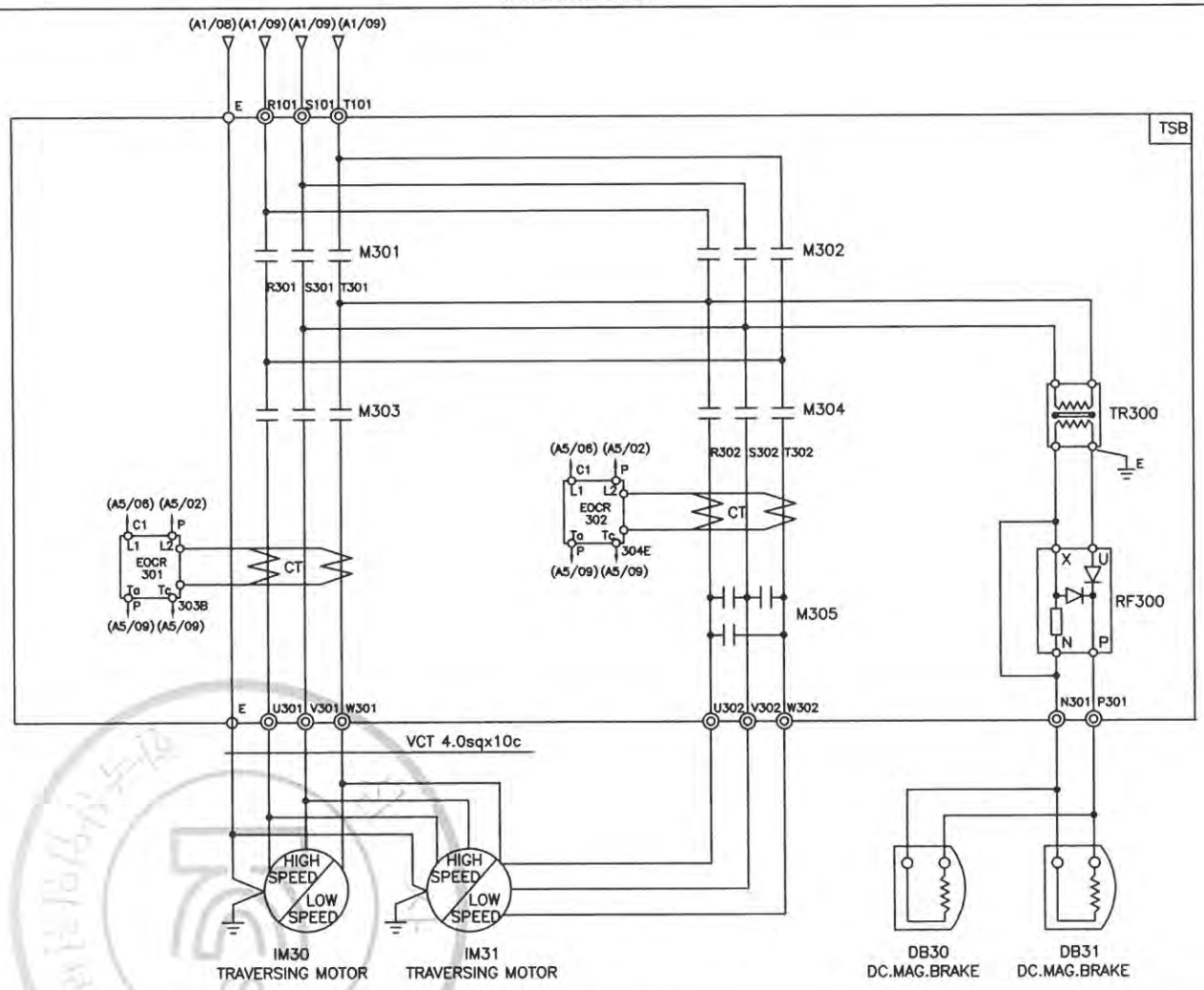

SPECIFICATION / SYMBOLS / DESCRIPTION		TRAVERSING MOTOR	DC MAG' BRAKE	MAGNET CONTACTOR		SILICON RECTIFIER	ELECTRIC OVER CURRENT RELAY	TRANSFORMER
		IM 30 , 31	DB30 , 31	M301 , M302 , M303	M304 , M305	RF 300	EOCR 301,302	TR300
	380V	1.5/0.75KWx4/8P AC3PH 380V 60Hz	DC 100V	DMC22b	DMC22b	SR-30	SS-30	AC380/220V, 500VA
	380V	1.0/0.5KWx6/12P AC3PH 380V 60Hz	DC 100V	DMC22b	DMC22b	SR-30	SS-30	AC380/220V, 500VA
SELECTION MAKER		KUKDONG		DONG-A		ASECO		SHINHAN

4				CUSTOMER		DRAWING	DESIGN	CHECKED	APPROVED	SCALE	DATE	ORDER NO.
3										NONE		
2				DRAWING TITLE	TRAVERSING POWER CONTROL CIRCUIT	KD 극동호이스트 주식회사 KUK DONG HOIST CO., LTD.				DWG. NO	KD15E36
1					DIAGRAM						
MK	DATE	REVISIONS	CHK.	APP.							

불법복제 및 배포금지

192.168.11.51 / 2019-05-21 13:51:47

1	2	3	4	5	6	7	8	9	10	11	12	13	14	15	16	17	18	19	20.

ADR'S NO.

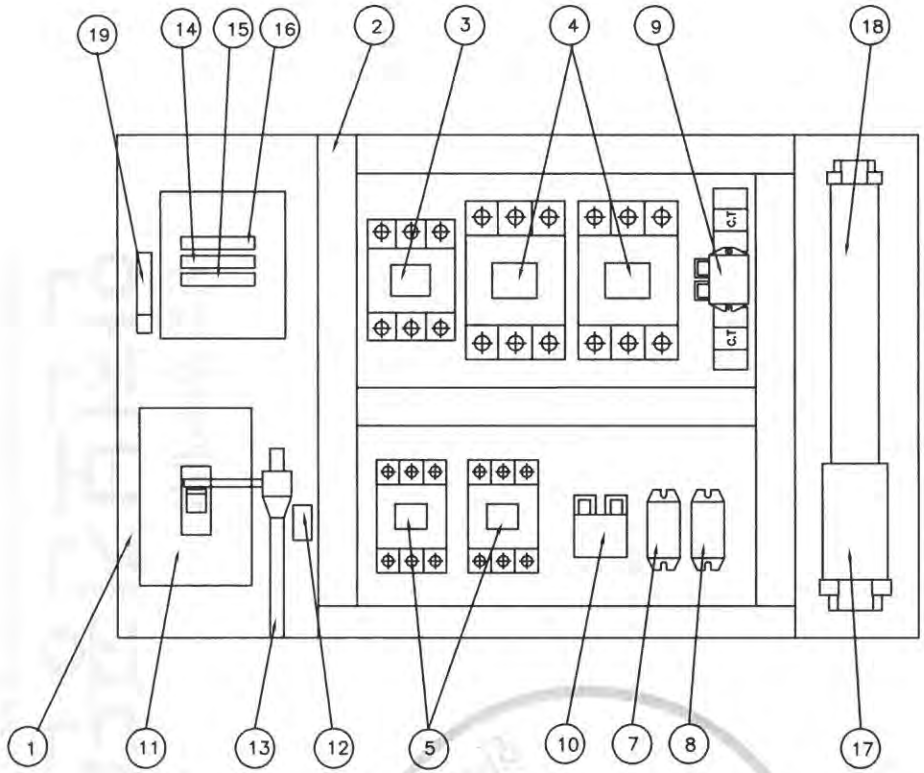

NO	DESCRIPTION	SPECIFICATION	Q'TY	REMARK
1	CHASSIS PLATE		1	아 연 도 금
2	CABLE DUCT	–	1	
3	MAGNET CONTACT	DMC50	1	M1, MAIN MAG.
4	MAGNET CONTACT	DMC85	2	HOISTING
5	MAGNET CONTACT	DMC22b	2	TRAVERSING
7	SILICON RECTIFIER	SR–60	1	HOISTING
8	SILICON RECTIFIER	SR–30	1	TRAVERSING
9	E.O.C.R	SS–60	1	HOISTING
10	E.O.C.R	SS–05 (30M : SS–30)	1	TRAVERSING
11	MCCB100	53AF/40AT	1	LS–2
12	UPPER LIMIT	AC 600V/3A	1	LS–1
13	LIMIT LEVER	SS–400	1	
14	FUSE (F11,F12)	2 A	2	
15	FUSE (F13)	5 A	1	
16	TRANSFORMER	440V/110,120V, 200VA	1	
17	TERMINAL BLOCK	60A,25A		
18	TERMINAL BLOCK	15A		
19	EARTH TERMINAL	5tx25x50	1	

– 주행 포함 시 3. MAIN MAG. 삭제 –

NOTE

1. UPPER LIMIT LS–1의 접점 허용 전류 용량. : AC 600V, 3A
2. UPPER LIMIT LS–2의 접점 허용 전류 용량. : NFB 53AF
3. EARTH TERMINAL RESISTANCE : 0.018 Ω
4. POWER SOURCE : AC. 3ø 440V 60HZ

NOTE

1. 전선의 색상은 다음과 같다.
   1) 흑색 : 고류 및 직류 전원선로
   2) 적색 : 고류제어회로
   3) 주황색 : 외부 전원에서 공급되는 연동장치 제어회로
   4) 녹색 또는 녹색과 황색 혼용 : 접지선
   5) 청색 : 고류 및 직류 전원선로
2. CABLE MATERIAL : KIV OR EQUIVALENT, MIN SIZE : 1.5sq
3. 제어용 전선 : 1.5mm KIV,HIV
4. 제작시 다소 변경 될수있음.
5. 외함 개방구조는 다음과 같을것.
   1) 외함 개방시 충전부분이 차단되도록 할것.
   2) 외함 개방후 충전되어있는 부분은 IP2X 이상의 직접 접촉 방호가 되어있을것.

MK	DATE	REVISIONS	CHK.	APP.
4				
3				
2				
1				

CUSTOMER	
DRAWING TITLE	HOISTING CONTROL BOX ARRANGEMENT DRAWING

DRAWING	DESIGN	CHECKED	APPROVED	SCALE	DATE	ORDER NO.
				NONE		

극동호이스트 주식회사
KUK DONG HOIST CO., LTD.

DWG. NO KD15BA41

192.168.11.51 / 2019-05-21 13:51:47

불법복제 및 배포금지

1	2	3	4	5	6	7	8	9	10	11	12	13	14	15	16	17	18	19	20
POWER CIRCUIT																			ADR'S NO.
HOISTING MOTION										TRAVERSING MOTION									B1

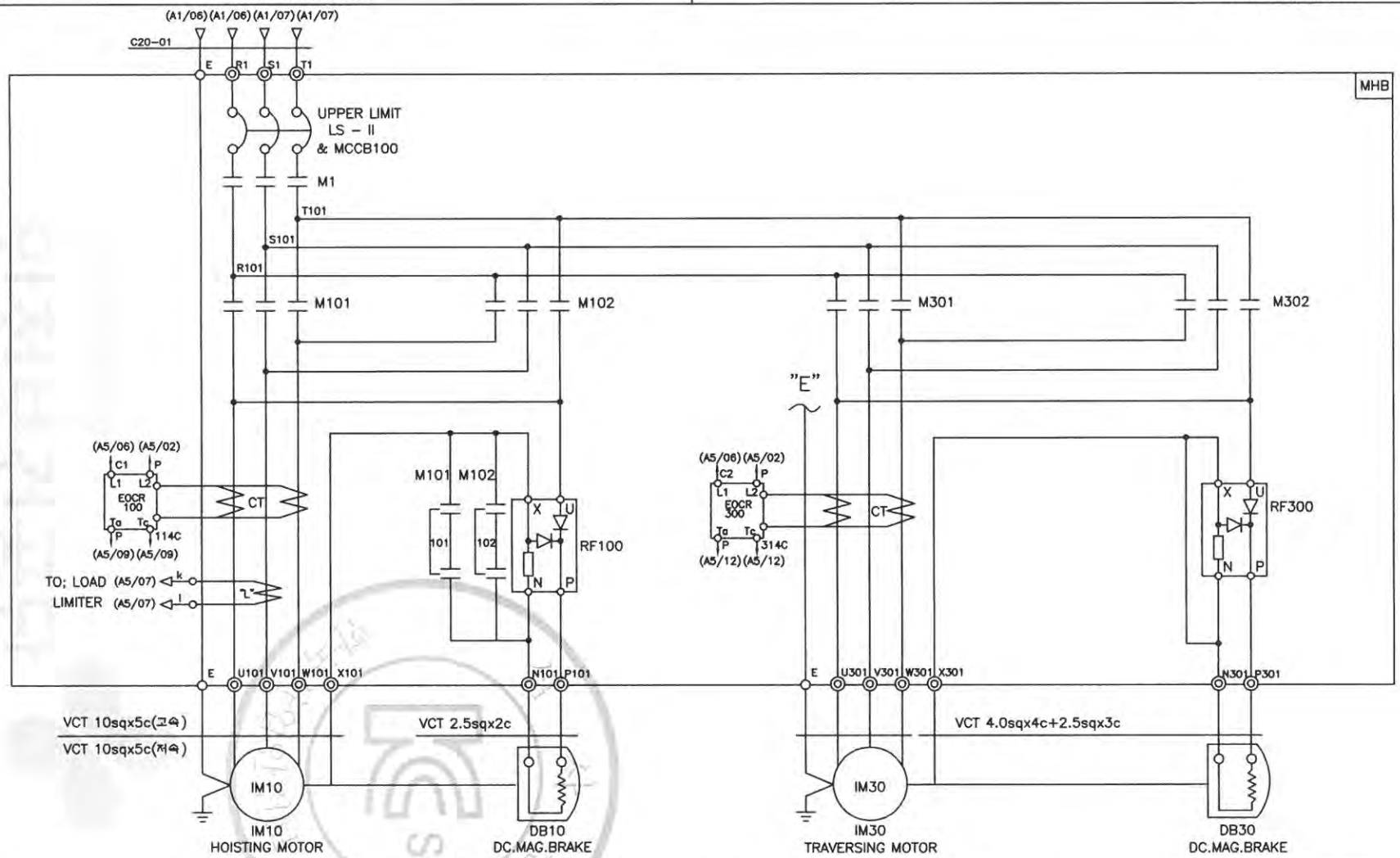

SPECIFICATION / SYMBOLS / DESCRIPTION	HOISTING POWER	HOISTING MOTOR	TRAVERSING MOTOR	DC.MAG' BRAKE	NO FUSE BREAKER	TRANSFORMER	FUSE		MAIN MAGNET	MAGNET CONTACTOR		UPPER LIMIT	ELECTRIC OVER CURRENT RELAY		SILICON RECTIFIER		LOAD LIMITER	CABLE
	HOIST	IM 10	IM 30	DB10, 30	LS-II & MCCB100	TR 1	F11,F12	F13	M1	M101,M102	M301,M302	LS-I	EOCR100	EOCR300	RF100	RF300	LOAD LIMITER	C20-01
	15TON AC3PH 440V 60Hz	13KW x 8P	1.5KW x 4P	DC 100V	ABS-53AF/40AT	440/110,120V,200VA	2A	5A	DMC50	DMC85	DMC22b	AC 600V 3A	SS-60	SS-05	SR-60	SR-30	JDL-100	VCT 10sqx4c
	15TON AC3PH 440V 60Hz	8.5KW x 12P	1.0KW x 6P	DC 100V	ABS-53AF/40AT	440/110,120V,200VA	2A	5A	DMC50	DMC85	DMC22b	AC 600V 3A	SS-60	SS-05	SR-60	SR-30	JDL-100	VCT 10sqx4c
SELECTION / MAKER	KUKDONG				LS	SHINHAN	–		DONG-A			KUKDONG	ASECO				JUNGHO	DONGIL

MK	DATE	REVISIONS	CHK.	APP.
4				
3				
2				
1				

CUSTOMER		DRAWING	DESIGN	CHECKED	APPROVED	SCALE	DATE	ORDER NO.
DRAWING TITLE	HOISTING & T/S POWER CONTROL CIRCUIT DIAGRAM					NONE		
		극동호이스트 주식회사 KUK DONG HOIST CO., LTD.				DWG. NO	KD15E41	

192.168.11.51 / 2019-05-21 13:51:47

불법복제 및 배포금지

1	2	3	4	5	6	7	8	9	10	11	12	13	14	15	16	17	18	19	20
POWER CIRCUIT																			ADR'S NO.
HOISTING MOTION										TRAVERSING MOTION									B1

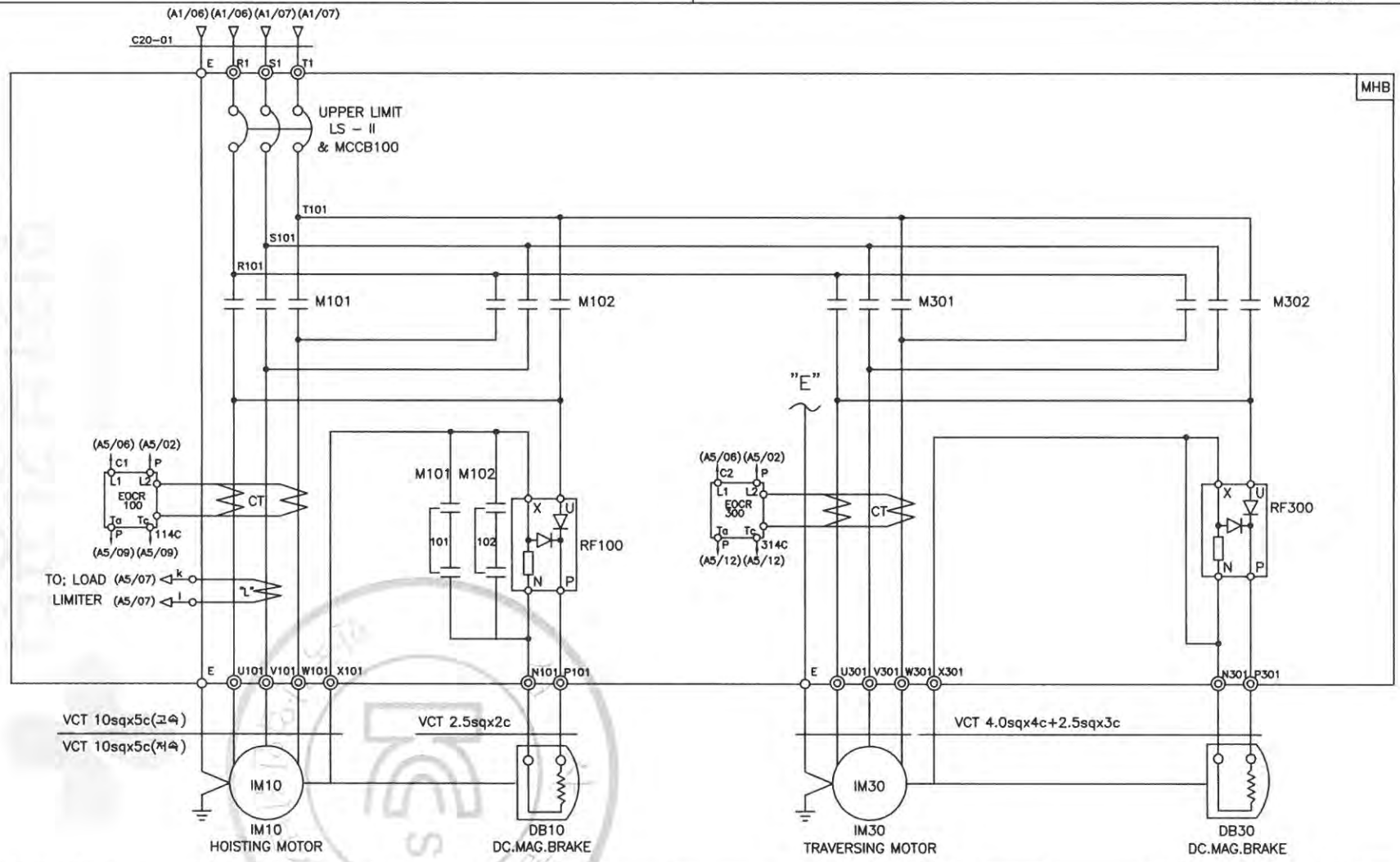

SPECIFICATION / SYMBOLS	HOISTING POWER	HOISTING MOTOR	TRAVERSING MOTOR	DC.MAG' BRAKE	NO FUSE BREAKER	TRANSFORMER	FUSE		MAGNET CONTACTOR		UPPER LIMIT	ELECTRIC OVER CURRENT RELAY		SILICON RECTIFIER		LOAD LIMITER	CABLE
DESCRIPTION	HOIST	IM 10	IM 30	DB10, 30	LS-II & MCCB100	TR 1	F11,F12	F13	M101,M102	M301,M302	LS-I	EOCR100	EOCR300	RF100	RF300	LOAD LIMITER	C20-01
	15TON AC3PH 440V 60Hz	13KW x 8P	1.5KW x 4P	DC 100V	ABS-53AF/40AT	440/110,120V,200VA	2A	5A	DMC85	DMC22b	AC 600V 3A	SS-60	SS-05	SR-60	SR-30	JDL-100	VCT 10sqx4c
	15TON AC3PH 440V 60Hz	8.5KW x 12P	1.0KW x 6P	DC 100V	ABS-53AF/40AT	440/110,120V,200VA	2A	5A	DMC85	DMC22b	AC 600V 3A	SS-60	SS-05	SR-60	SR-30	JDL-100	VCT 10sqx4c
SELECTION / MAKER	KUKDONG				LS	SHINHAN	–		DONG-A		KUKDONG	ASECO				JUNGHO	DONGIL

MK	DATE	REVISIONS	CHK.	APP.
4				
3				
2				
1				

CUSTOMER		DRAWING	DESIGN	CHECKED	APPROVED	SCALE	DATE	ORDER NO.
DRAWING TITLE	HOISTING & T/S POWER CONTROL CIRCUIT DIAGRAM					NONE		
		극동호이스트 주식회사 KUK DONG HOIST CO., LTD.				DWG. NO	KD15E42	

192.168.11.51 / 2019-05-21 13:51:47

불법복제 및 배포금지

1	2	3	4	5	6	7	8	9	10	11	12	13	14	15	16	17	18	19	20
POWER CIRCUIT																			ADR'S NO.
HOISTING MOTION										TRAVERSING MOTION									B1

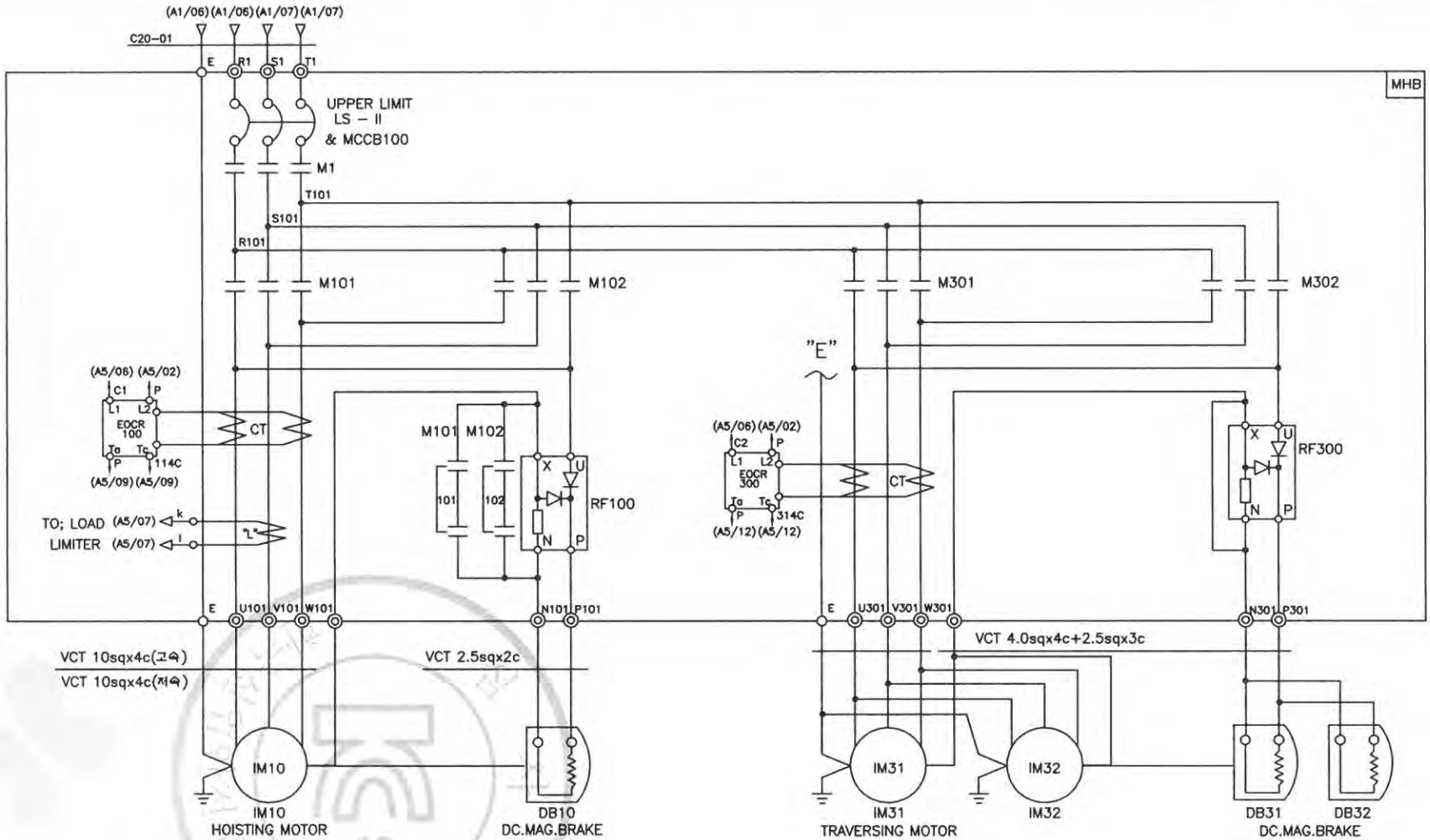

SPECIFICATION / SYMBOLS / DESCRIPTION	HOISTING POWER	HOISTING MOTOR	TRAVERSING MOTOR	DC.MAG' BRAKE	NO FUSE BREAKER	TRANSFORMER	FUSE		MAIN MAGNET	MAGNET CONTACTOR		UPPER LIMIT	ELECTRIC OVER CURRENT RELAY		SILICON RECTIFIER		LOAD LIMITER	CABLE
	HOIST	IM 10	IM 31,32	DB10,31,32	LS-II & MCCB100	TR 1	F11,F12	F13	M1	M101,M102	M301,M302	LS-I	EOCR100	EOCR300	RF100	RF300	LOAD LIMITER	C20-01
	15TON AC3PH 440V 60Hz	13KW x 8P	1.5KW x 4P	DC 100V	ABS-53AF/40AT	440/110,120V,200VA	2A	5A	DMC50	DMC85	DMC22b	AC 600V 3A	SS-60	SS-30	SR-60	SR-30	JDL-100	VCT 10sqx4c
	15TON AC3PH 440V 60Hz	8.5KW x 12P	1.0KW x 6P	DC 100V	ABS-53AF/40AT	440/110,120V,200VA	2A	5A	DMC50	DMC85	DMC22b	AC 600V 3A	SS-60	SS-30	SR-60	SR-30	JDL-100	VCT 10sqx4c
SELECTION / MAKER	KUKDONG				LS	SHINHAN	–		DONG-A			KUKDONG	ASECO				JUNGHO	DONGIL

MK	DATE	REVISIONS	CHK.	APP.
4				
3				
2				
1				

CUSTOMER		DRAWING	DESIGN	CHECKED	APPROVED	SCALE	DATE	ORDER NO.
DRAWING TITLE	HOISTING & T/S POWER CONTROL CIRCUIT DIAGRAM					NONE		
		극동호이스트 주식회사 KUK DONG HOIST CO., LTD.				DWG. NO	KD20E43	

192.168.11.51 / 2019-05-21 13:51:47

불법복제 및 배포금지

1	2	3	4	5	6	7	8	9	10	11	12	13	14	15	16	17	18	19	20
POWER CIRCUIT																			ADR'S NO.
HOISTING MOTION										TRAVERSING MOTION									B1

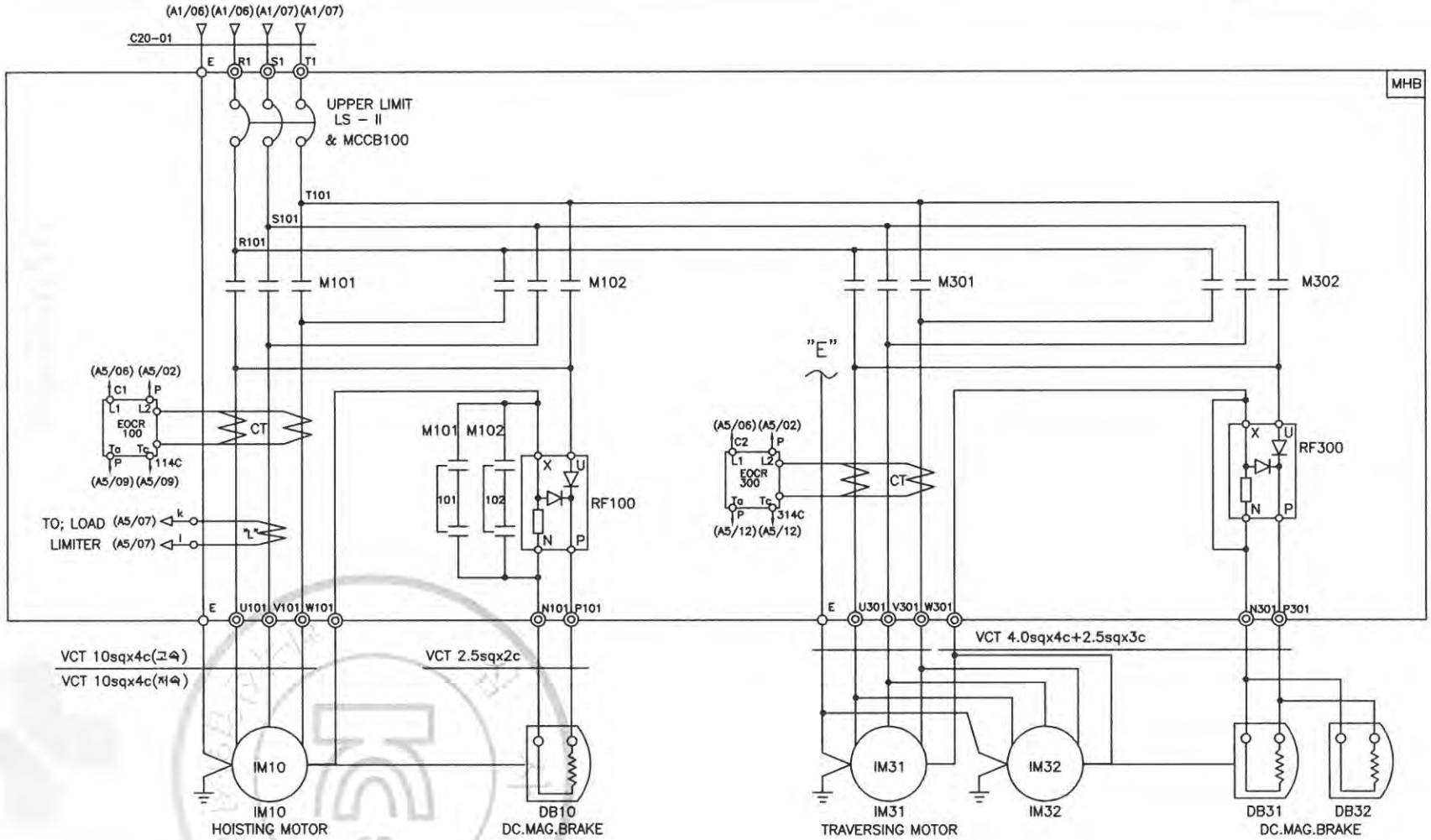

SPECIFICATION / SYMBOLS / DESCRIPTION	HOISTING POWER	HOISTING MOTOR	TRAVERSING MOTOR	DC.MAG' BRAKE	NO FUSE BREAKER	TRANSFORMER	FUSE		MAGNET CONTACTOR		UPPER LIMIT	ELECTRIC OVER CURRENT RELAY		SILICON RECTIFIER		LOAD LIMITER	CABLE
	HOIST	IM 10	IM 31,32	DB10,31,32	LS-II & MCCB100	TR 1	F11,F12	F13	M101,M102	M301,M302	LS-I	EOCR100	EOCR300	RF100	RF300	LOAD LIMITER	C20-01
	15TON AC3PH 440V 60Hz	13KW x 8P	1.5KW x 4P	DC 100V	ABS-53AF/40AT	440/110,120V,200VA	2A	5A	DMC85	DMC22b	AC 600V 3A	SS-60	SS-30	SR-60	SR-30	JDL-100	VCT 10sqx4c
	15TON AC3PH 440V 60Hz	8.5KW x 12P	1.0KW x 6P	DC 100V	ABS-53AF/40AT	440/110,120V,200VA	2A	5A	DMC85	DMC22b	AC 600V 3A	SS-60	SS-30	SR-60	SR-30	JDL-100	VCT 10sqx4c
SELECTION / MAKER	KUKDONG				LS	SHINHAN	–		DONG-A		KUKDONG	ASECO				JUNGHO	DONGIL

MK	DATE	REVISIONS	CHK.	APP.
4				
3				
2				
1				

CUSTOMER		DRAWING	DESIGN	CHECKED	APPROVED	SCALE	DATE	ORDER NO.
DRAWING TITLE	HOISTING & T/S POWER CONTROL CIRCUIT DIAGRAM					NONE		
		극동호이스트 주식회사 KUK DONG HOIST CO., LTD.				DWG. NO	KD20E44	

192.168.11.51 / 2019-05-21 13:51:47

불법복제 및 배포금지

1	2	3	4	5	6	7	8	9	10	11	12	13	14	15	16	17	18	19	20
POWER CIRCUIT																			ADR'S NO.
TRAVERSING MOTION																			C2

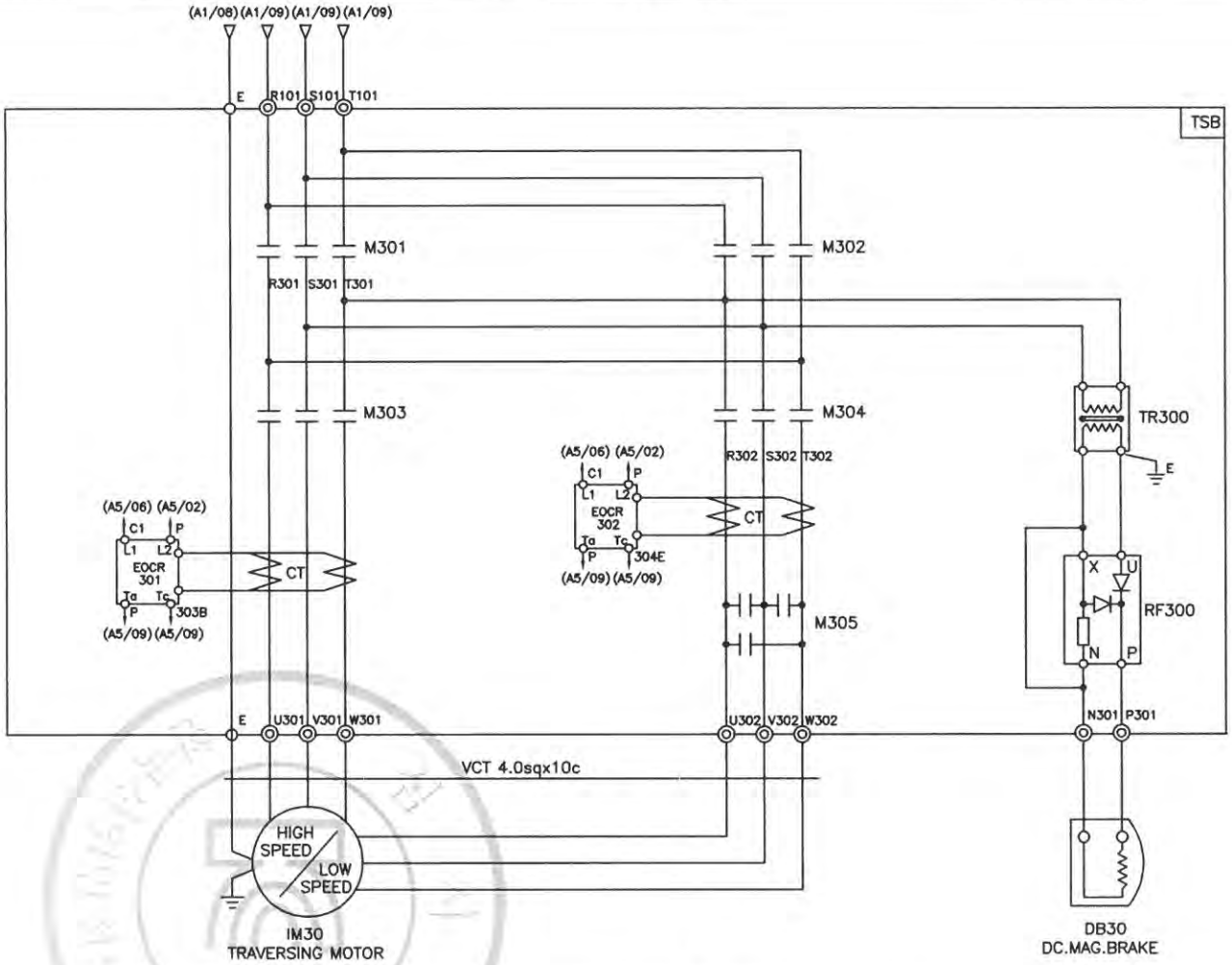

SPECIFICATION / SYMBOLS / DESCRIPTION		TRAVERSING MOTOR	DC MAG' BRAKE	MAGNET CONTACTOR		SILICON RECTIFIER	ELECTRIC OVER CURRENT RELAY	TRANSFORMER
		IM 30	DB30	M301 , M302 , M303,	M304, M305	RF 300	EOCR 301,302	TR300
	440V	1.5/0.75KWx4/8P AC3PH 440V 60Hz	DC 100V	DMC22b	DMC22b	SR-30	SS-05	AC440/220V, 300VA
	440V	1.0/0.5KWx6/12P AC3PH 440V 60Hz	DC 100V	DMC22b	DMC22b	SR-30	SS-05	AC440/220V, 300VA
SELECTION MAKER		KUKDONG		DONG-A		ASECO		SHINHAN

MK	DATE	REVISIONS	CHK.	APP.
4				
3				
2				
1				

CUSTOMER		DRAWING	DESIGN	CHECKED	APPROVED	SCALE	DATE	ORDER NO.
DRAWING TITLE	TRAVERSING POWER CONTROL CIRCUIT DIAGRAM					NONE		
		극동호이스트 주식회사 KUK DONG HOIST CO., LTD.				DWG. NO	KD15E45	

192.168.11.51 / 2019-05-21 13:51:47

불법복제 및 배포금지

1	2	3	4	5	6	7	8	9	10	11	12	13	14	15	16	17	18	19	20
POWER CIRCUIT																			ADR'S NO.
TRAVERSING MOTION																			C2

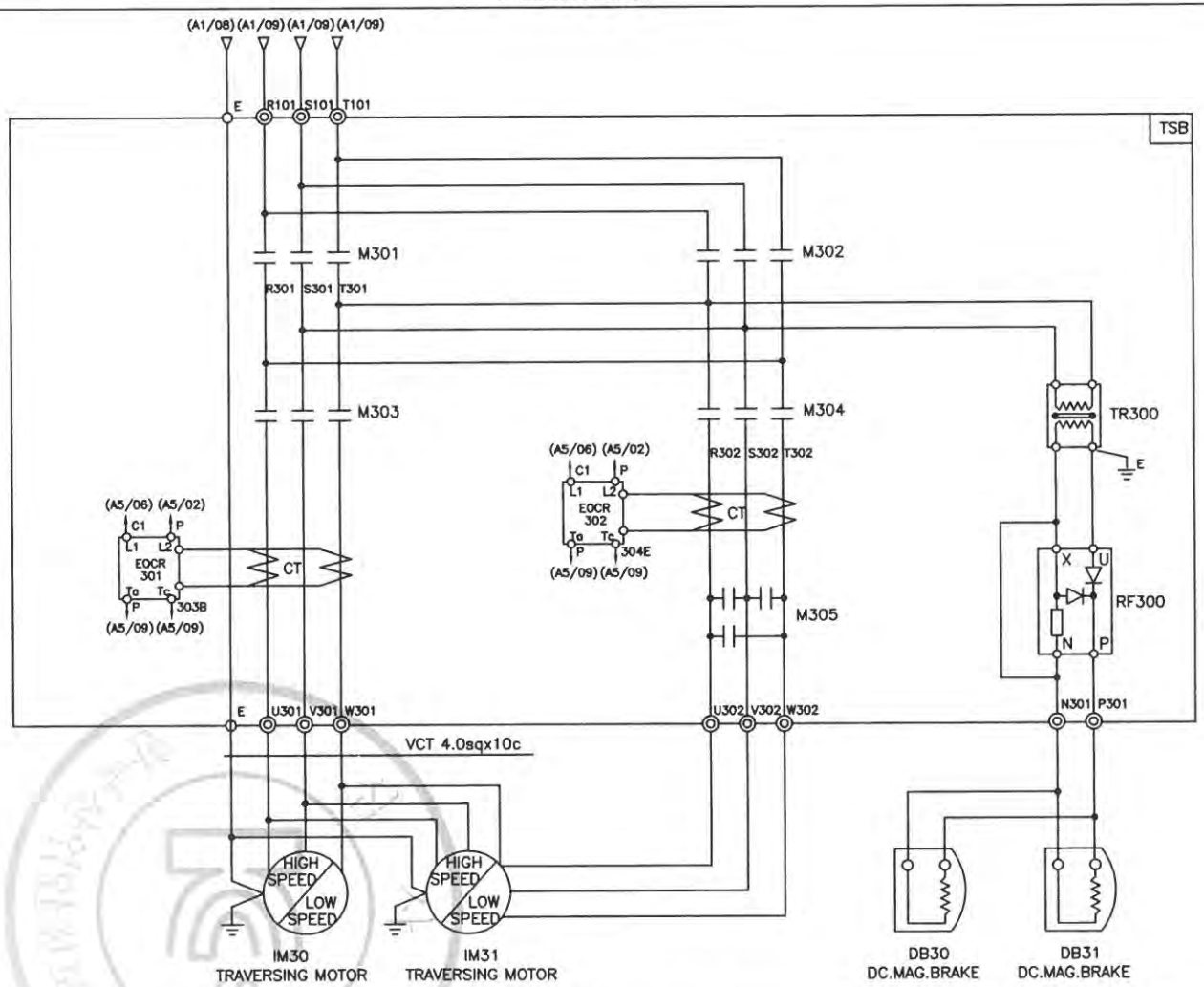

SPECIFICATION / SYMBOLS / DESCRIPTION		TRAVERSING MOTOR	DC MAG' BRAKE	MAGNET CONTACTOR		SILICON RECTIFIER	ELECTRIC OVER CURRENT RELAY	TRANSFORMER
		IM 30 , 31	DB30 , 31	M301 , M302 , M303,	M304, M305	RF 300	EOCR 301,302	TR300
	440V	1.5/0.75KWx4/8P AC3PH 440V 60Hz	DC 100V	DMC22b	DMC22b	SR-30	SS-30	AC440/220V, 500VA
	440V	1.0/0.5KWx6/12P AC3PH 440V 60Hz	DC 100V	DMC22b	DMC22b	SR-30	SS-30	AC440/220V, 500VA
SELECTION / MAKER		KUKDONG		DONG-A		ASECO		SHINHAN

MK	DATE	REVISIONS	CHK.	APP.
4				
3				
2				
1				

CUSTOMER		DRAWING	DESIGN	CHECKED	APPROVED	SCALE	DATE	ORDER NO.
DRAWING TITLE	TRAVERSING POWER CONTROL CIRCUIT DIAGRAM					NONE		
		극동호이스트 주식회사 KUK DONG HOIST CO., LTD.				DWG. NO	KD15E46	

192.168.11.51 / 2019-05-21 13:51:47

불법복제 및 배포금지

1	2	3	4	5	6	7	8	9	10	11	12	13	14	15	16	17	18	19	20.

ADR'S NO.

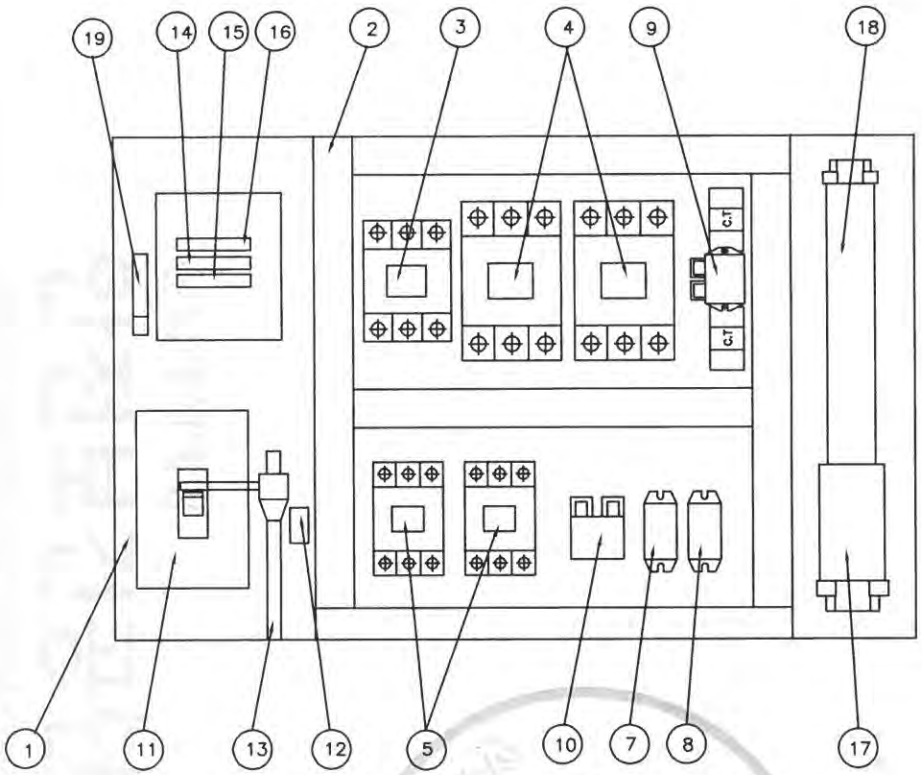

NO	DESCRIPTION	SPECIFICATION	Q'TY	REMARK
1	CHASSIS PLATE		1	아 연 도 금
2	CABLE DUCT	–	1	
3	MAGNET CONTACT	DMC50	1	M1, MAIN MAG.
4	MAGNET CONTACT	DMC85	2	HOISTING
5	MAGNET CONTACT	DMC22b	2	TRAVERSING
7	SILICON RECTIFIER	SR–60	1	HOISTING
8	SILICON RECTIFIER	SR–30	1	TRAVERSING
9	E.O.C.R	SS–60	1	HOISTING
10	E.O.C.R	SS–05 (30M : SS–30)	1	TRAVERSING
11	MCCB100	53AF/40AT	1	LS–2
12	UPPER LIMIT	AC 600V/3A	1	LS–1
13	LIMIT LEVER	SS–400	1	
14	FUSE (F11,F12)	2 A	2	
15	FUSE (F13)	5 A	1	
16	TRANSFORMER	460V/110,120V, 200VA	1	
17	TERMINAL BLOCK	60A,25A		
18	TERMINAL BLOCK	15A		
19	EARTH TERMINAL	5tx25x50	1	

– 주행 포함 시 3. MAIN MAG. 삭제 –

NOTE

1. UPPER LIMIT LS–1의 접점 허용 전류 용량. : AC 600V, 3A
2. UPPER LIMIT LS–2의 접점 허용 전류 용량. : NFB 53AF
3. EARTH TERMINAL RESISTANCE : 0.018 Ω
4. POWER SOURCE : AC. 3ø 460V 60HZ

NOTE

1. 전선의 색상은 다음과 같다.
   1) 흑색 : 고류 및 직류 전원선로
   2) 적색 : 고류제어회로
   3) 주황색 : 외부 전원에서 공급되는 연동장치 제어회로
   4) 녹색 또는 녹색과 황색 혼용 : 접지선
   5) 청색 : 직류 제어선로
2. CABLE MATERIAL : KIV OR EQUIVALENT, MIN SIZE : 1.5sq
3. 제어용 전선 : 1.5mm KIV,HIV
4. 제작시 다소 변경 될수있음.
5. 외함 개방구조는 다음과 같을것.
   1) 외함 개방시 충전부분이 차단되도록 할것.
   2) 외함 개방후 충전되어있는 부분은 IP2X 이상의 직접 접촉 방호가 되어있을것.

MK	DATE	REVISIONS	CHK.	APP.
4				
3				
2				
1				

CUSTOMER	KD–WM–20T–L12
DRAWING TITLE	HOISTING CONTROL BOX
	ARRANGEMENT DRAWING

DRAWING	DESIGN	CHECKED	APPROVED	SCALE	DATE	ORDER NO.
				NONE		

극동호이스트 주식회사
KUK DONG HOIST CO., LTD.

DWG. NO KD15BA51

불법복제 및 배포금지

192.168.11.51 / 2019-05-21 13:51:47

1	2	3	4	5	6	7	8	9	10	11	12	13	14	15	16	17	18	19	20

POWER CIRCUIT

ADR'S NO. B1

HOISTING MOTION | TRAVERSING MOTION

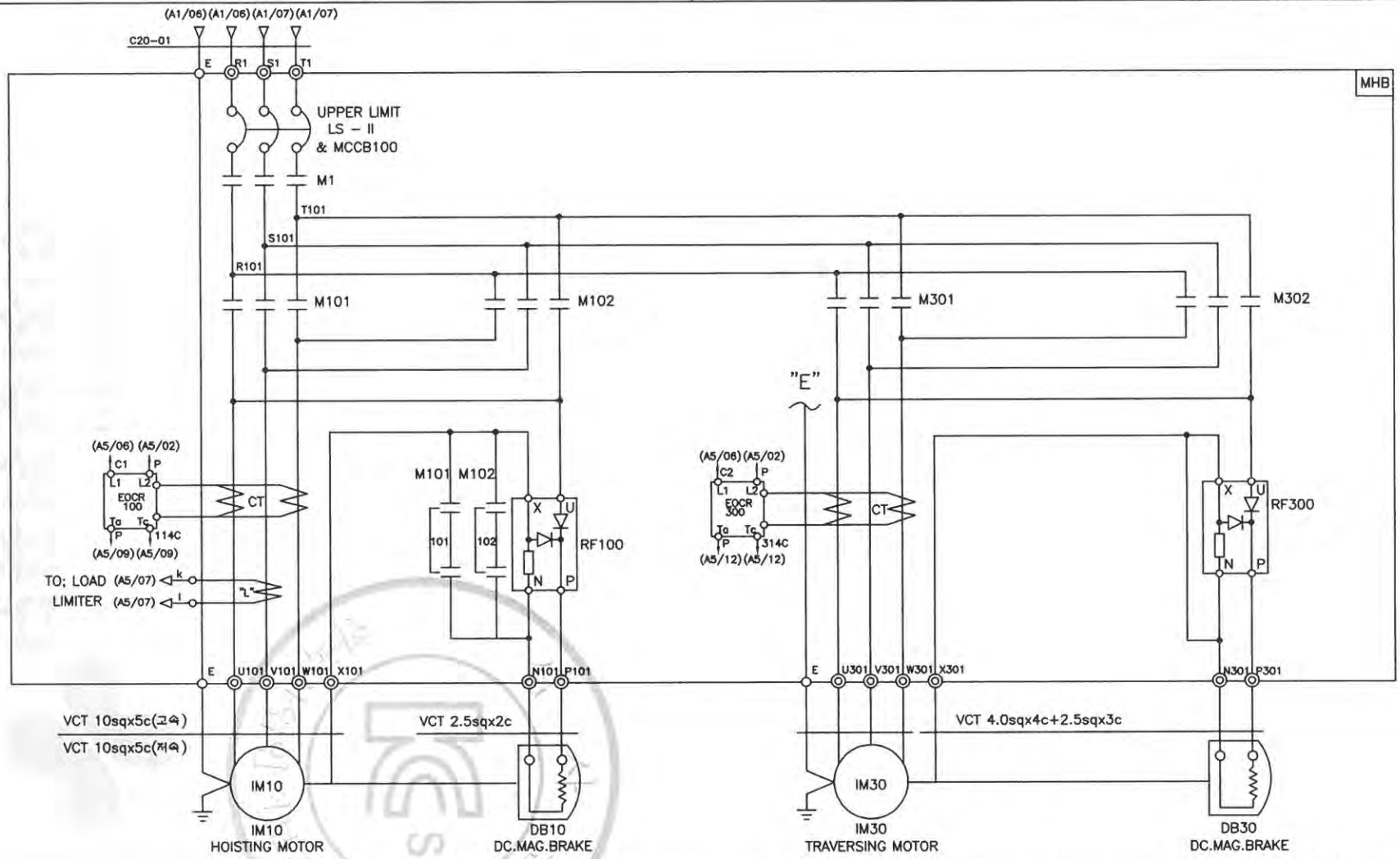

SPECIFICATION / SYMBOLS / DESCRIPTION	HOISTING POWER	HOISTING MOTOR	TRAVERSING MOTOR	DC.MAG' BRAKE	NO FUSE BREAKER	TRANSFORMER	FUSE		MAIN MAGNET	MAGNET CONTACTOR		UPPER LIMIT	ELECTRIC OVER CURRENT RELAY		SILICON RECTIFIER		LOAD LIMITER	CABLE
	HOIST	IM 10	IM 30	DB10, 30	LS-II & MCCB100	TR 1	F11,F12	F13	M1	M101,M102	M301,M302	LS-I	EOCR100	EOCR300	RF100	RF300	LOAD LIMITER	C20-01
	15TON AC3PH 460V 60Hz	13KW x 8P	1.5KW x 4P	DC 100V	ABS-53AF/40AT	460/110,120V,200VA	2A	5A	DMC50	DMC85	DMC22b	AC 600V 3A	SS-60	SS-05	SR-60	SR-30	JDL-100	VCT 10sqx4c
	15TON AC3PH 460V 60Hz	8.5KW x 12P	1.0KW x 6P	DC 100V	ABS-53AF/40AT	460/110,120V,200VA	2A	5A	DMC50	DMC85	DMC22b	AC 600V 3A	SS-60	SS-05	SR-60	SR-30	JDL-100	VCT 10sqx4c
SELECTION / MAKER	KUKDONG				LS	SHINHAN	–		DONG-A			KUKDONG	ASECO				JUNGHO	DONGIL

MK	DATE	REVISIONS	CHK.	APP.
4				
3				
2				
1				

CUSTOMER

DRAWING TITLE: HOISTING & T/S POWER CONTROL CIRCUIT DIAGRAM

DRAWING	DESIGN	CHECKED	APPROVED	SCALE	DATE	ORDER NO.
				NONE		

극동호이스트 주식회사
KUK DONG HOIST CO., LTD.

DWG. NO KD15E51

192.168.11.51 / 2019-05-21 13:51:47

불법복제 및 배포금지

1	2	3	4	5	6	7	8	9	10	11	12	13	14	15	16	17	18	19	20
POWER CIRCUIT																			ADR'S NO.
HOISTING MOTION										TRAVERSING MOTION									B1

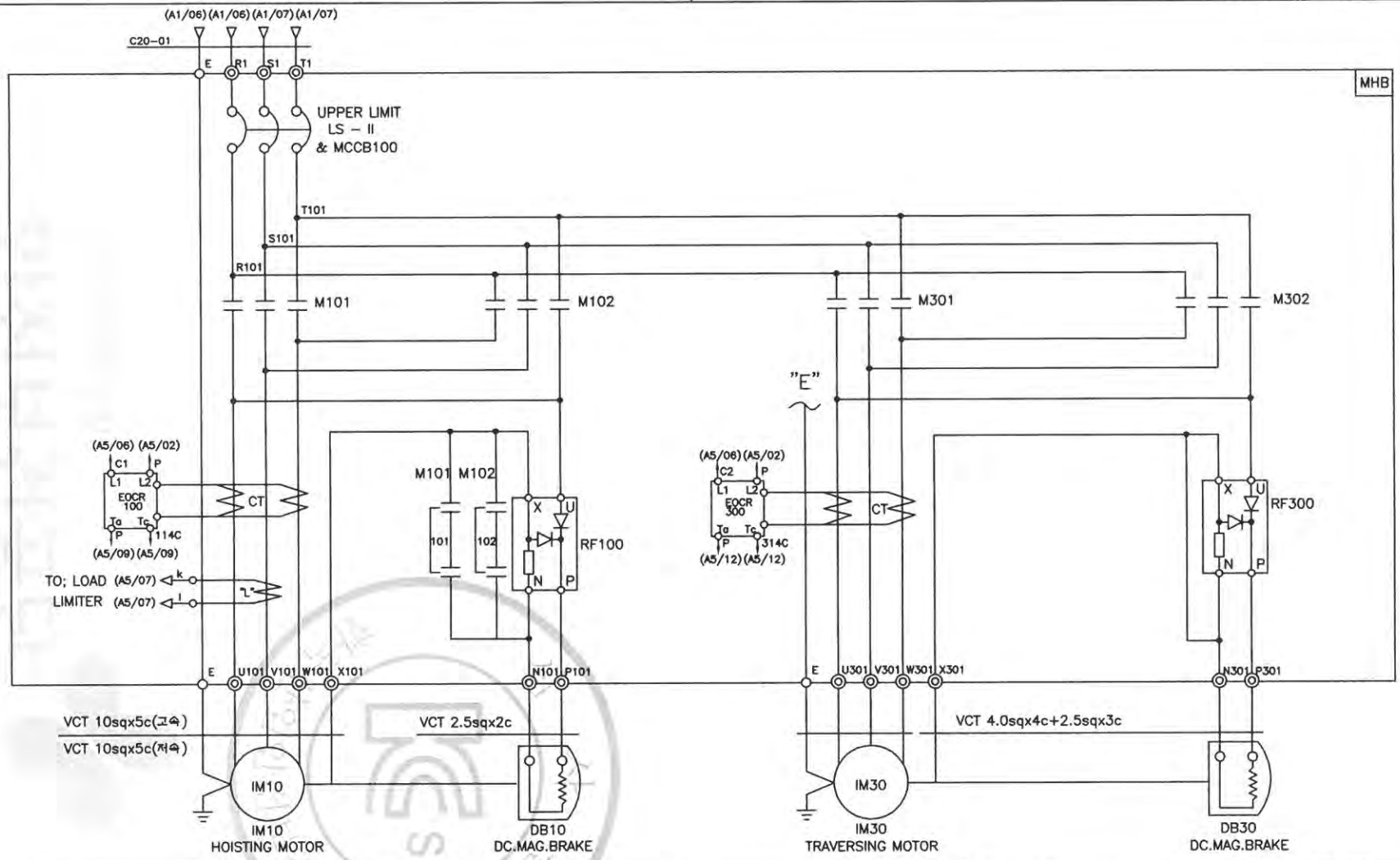

SPECIFICATION / SYMBOLS / DESCRIPTION	HOISTING POWER	HOISTING MOTOR	TRAVERSING MOTOR	DC.MAG' BRAKE	NO FUSE BREAKER	TRANSFORMER	FUSE		MAGNET CONTACTOR		UPPER LIMIT	ELECTRIC OVER CURRENT RELAY		SILICON RECTIFIER		LOAD LIMITER	CABLE
	HOIST	IM 10	IM 30	DB10, 30	LS-II & MCCB100	TR 1	F11,F12	F13	M101,M102	M301,M302	LS-I	EOCR100	EOCR300	RF100	RF300	LOAD LIMITER	C20-01
	15TON AC3PH 460V 60Hz	13KW x 8P	1.5KW x 4P	DC 100V	ABS-53AF/40AT	460/110,120V,200VA	2A	5A	DMC85	DMC22b	AC 600V 3A	SS-60	SS-05	SR-60	SR-30	JDL-100	VCT 10sqx4c
	15TON AC3PH 460V 60Hz	8.5KW x 12P	1.0KW x 6P	DC 100V	ABS-53AF/40AT	460/110,120V,200VA	2A	5A	DMC85	DMC22b	AC 600V 3A	SS-60	SS-05	SR-60	SR-30	JDL-100	VCT 10sqx4c
SELECTION / MAKER	KUKDONG				DAERYUK	SHINHAN	–		DONG-A		KUKDONG	ASECO				JUNGHO	DONGIL

MK	DATE	REVISIONS	CHK.	APP.
4				
3				
2				
1				

CUSTOMER		DRAWING	DESIGN	CHECKED	APPROVED	SCALE	DATE	ORDER NO.
DRAWING TITLE	HOISTING & T/S POWER CONTROL CIRCUIT DIAGRAM					NONE		
		극동호이스트 주식회사 KUK DONG HOIST CO., LTD.				DWG. NO	KD15E52	

192.168.11.51 / 2019-05-21 13:51:47

무단배포 및 복제 금지

1	2	3	4	5	6	7	8	9	10	11	12	13	14	15	16	17	18	19	20
POWER CIRCUIT																			ADR'S NO.
HOISTING MOTION										TRAVERSING MOTION									B1

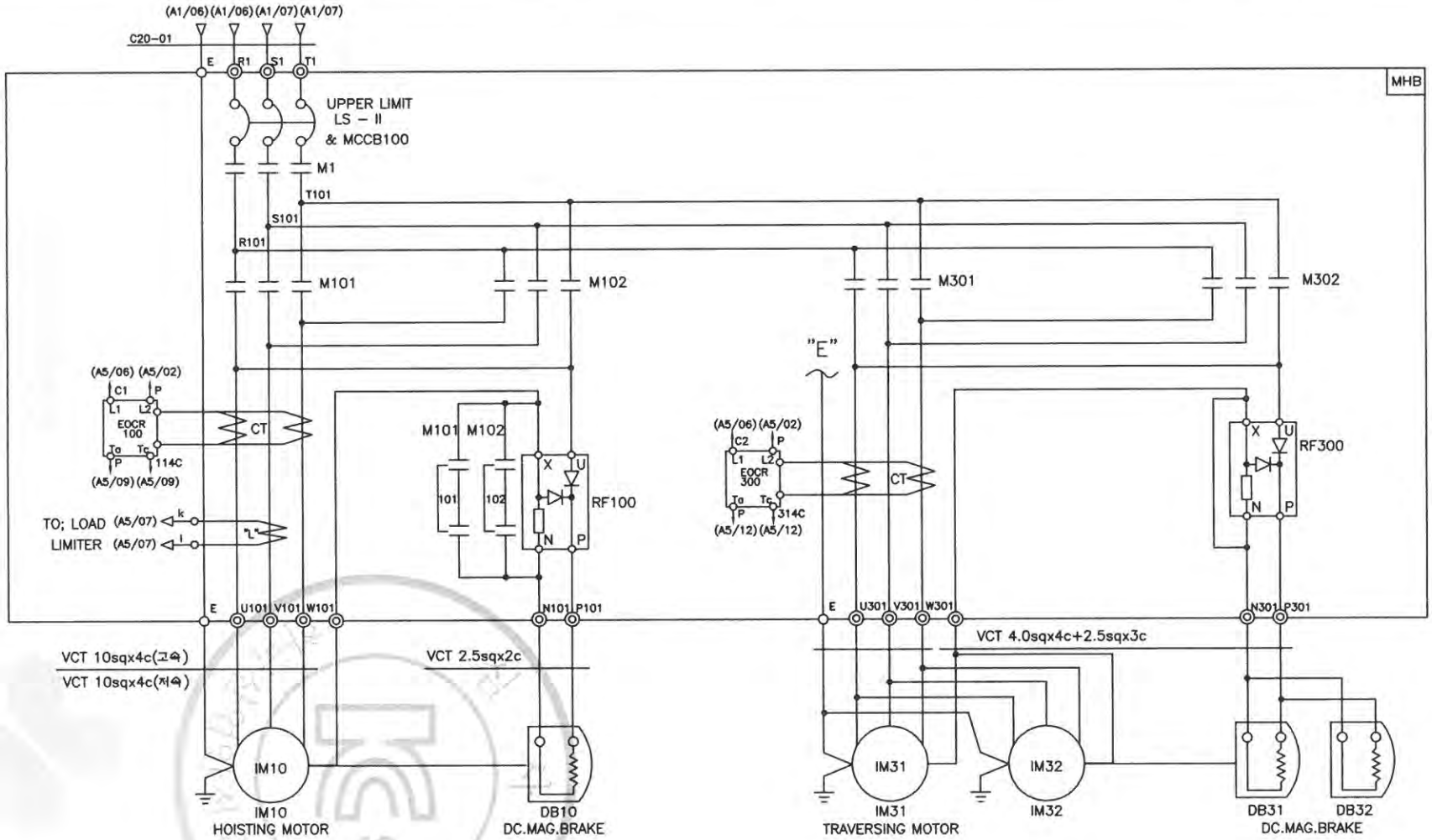

SPECIFICATION / SYMBOLS / DESCRIPTION	HOISTING POWER	HOISTING MOTOR	TRAVERSING MOTOR	DC.MAG' BRAKE	NO FUSE BREAKER	TRANSFORMER	FUSE		MAIN MAGNET	MAGNET CONTACTOR		UPPER LIMIT	ELECTRIC OVER CURRENT RELAY		SILICON RECTIFIER		LOAD LIMITER	CABLE
	HOIST	IM 10	IM 31,32	DB10,31,32	LS-II & MCCB100	TR 1	F11,F12	F13	M1	M101,M102	M301,M302	LS-I	EOCR100	EOCR300	RF100	RF300	LOAD LIMITER	C20-01
	15TON AC3PH 460V 60Hz	13KW x 8P	1.5KW x 4P	DC 100V	ABS-53AF/40AT	460/110,120V,200VA	2A	5A	DMC50	DMC85	DMC22b	AC 600V 3A	SS-60	SS-30	SR-60	SR-30	JDL-100	VCT 10sqx4c
	15TON AC3PH 460V 60Hz	8.5KW x 12P	1.0KW x 6P	DC 100V	ABS-53AF/40AT	460/110,120V,200VA	2A	5A	DMC50	DMC85	DMC22b	AC 600V 3A	SS-60	SS-30	SR-60	SR-30	JDL-100	VCT 10sqx4c
SELECTION / MAKER	KUKDONG				LS	SHINHAN	–		DONG-A			KUKDONG	ASECO				JUNGHO	DONGIL

MK	DATE	REVISIONS	CHK.	APP.
4				
3				
2				
1				

CUSTOMER		DRAWING	DESIGN	CHECKED	APPROVED	SCALE	DATE	ORDER NO.
DRAWING TITLE	HOISTING & T/S POWER CONTROL CIRCUIT DIAGRAM					NONE		
		극동호이스트 주식회사 KUK DONG HOIST CO., LTD.				DWG. NO	KD15E53	

192.168.11.51 / 2019-05-21 13:51:47

불법복제 및 배포금지

1	2	3	4	5	6	7	8	9	10	11	12	13	14	15	16	17	18	19	20
POWER CIRCUIT																			ADR'S NO.
HOISTING MOTION										TRAVERSING MOTION									B1

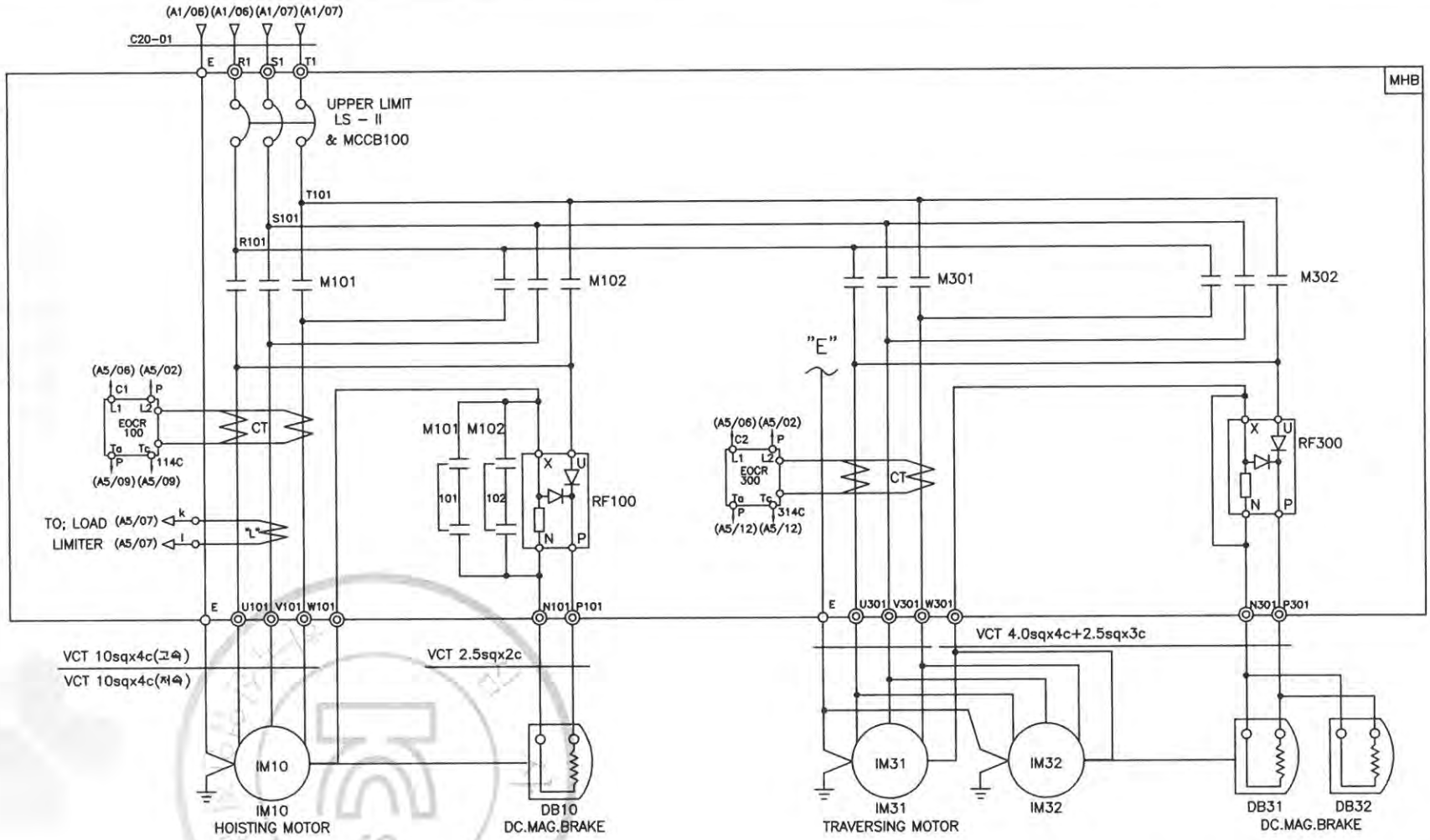

SPECIFICATION / SYMBOLS / DESCRIPTION	HOISTING POWER	HOISTING MOTOR	TRAVERSING MOTOR	DC.MAG' BRAKE	NO FUSE BREAKER	TRANSFORMER	FUSE		MAGNET CONTACTOR		UPPER LIMIT	ELECTRIC OVER CURRENT RELAY		SILICON RECTIFIER		LOAD LIMITER	CABLE
	HOIST	IM 10	IM 31,32	DB10,31,32	LS-II & MCCB100	TR 1	F11,F12	F13	M101,M102	M301,M302	LS-I	EOCR100	EOCR300	RF100	RF300	LOAD LIMITER	C20-01
	15TON AC3PH 460V 60Hz	13KW x 8P	1.5KW x 4P	DC 100V	ABS-53AF/40AT	460/110,120V,200VA	2A	5A	DMC85	DMC22b	AC 600V 3A	SS-60	SS-30	SR-60	SR-30	JDL-100	VCT 10sqx4c
	15TON AC3PH 460V 60Hz	8.5KW x 12P	1.0KW x 6P	DC 100V	ABS-53AF/40AT	460/110,120V,200VA	2A	5A	DMC85	DMC22b	AC 600V 3A	SS-60	SS-30	SR-60	SR-30	JDL-100	VCT 10sqx4c
SELECTION / MAKER	KUKDONG				LS	SHINHAN	–		DONG-A		KUKDONG	ASECO				JUNGHO	DONGIL

MK	DATE	REVISIONS	CHK.	APP.
4				
3				
2				
1				

CUSTOMER		DRAWING	DESIGN	CHECKED	APPROVED	SCALE	DATE	ORDER NO.
DRAWING TITLE	HOISTING & T/S POWER CONTROL CIRCUIT DIAGRAM					NONE		
		극동호이스트 주식회사 KUK DONG HOIST CO., LTD.				DWG. NO	KD15E54	

192.168.11.51 / 2019-05-21 13:51:47

불법복제 및 배포금지

1	2	3	4	5	6	7	8	9	10	11	12	13	14	15	16	17	18	19	20
POWER CIRCUIT																			ADR'S NO.
TRAVERSING MOTION																			C2

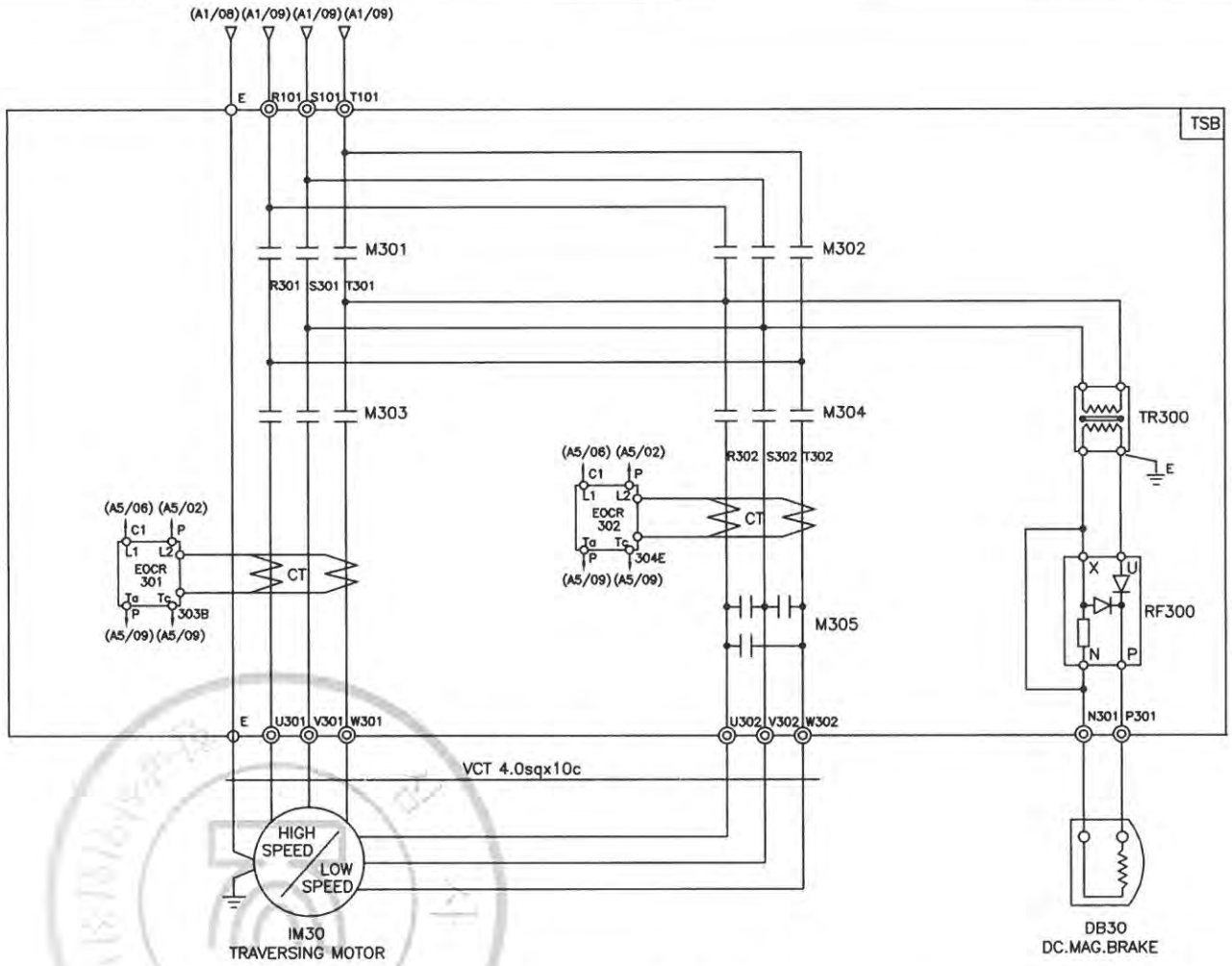

SPECIFICATION / SYMBOLS / DESCRIPTION		TRAVERSING MOTOR	DC MAG' BRAKE	MAGNET CONTACTOR		SILICON RECTIFIER	ELECTRIC OVER CURRENT RELAY	TRANSFORMER
		IM 30	DB30	M301 , M302 , M303,	M304, M305	RF 300	EOCR 301,302	TR300
	460V	1.5/0.75KWx4/8P AC3PH 460V 60Hz	DC 100V	DMC22b	DMC22b	SR-30	SS-05	AC460/220V, 300VA
	460V	1.0/0.5KWx6/12P AC3PH 460V 60Hz	DC 100V	DMC22b	DMC22b	SR-30	SS-05	AC460/220V, 300VA
SELECTION MAKER		KUKDONG		DONG-A		ASECO		SHINHAN

MK	DATE	REVISIONS	CHK.	APP.
4				
3				
2				
1				

CUSTOMER		DRAWING	DESIGN	CHECKED	APPROVED	SCALE	DATE	ORDER NO.
DRAWING TITLE	TRAVERSING POWER CONTROL CIRCUIT DIAGRAM					NONE		
		KD 극동호이스트 주식회사 KUK DONG HOIST CO., LTD.				DWG. NO	KD15E55	

192.168.11.51 / 2019-05-21 13:51:47

불법복제 및 배포금지

1	2	3	4	5	6	7	8	9	10	11	12	13	14	15	16	17	18	19	20
POWER CIRCUIT																			ADR'S NO.
TRAVERSING MOTION																			C2

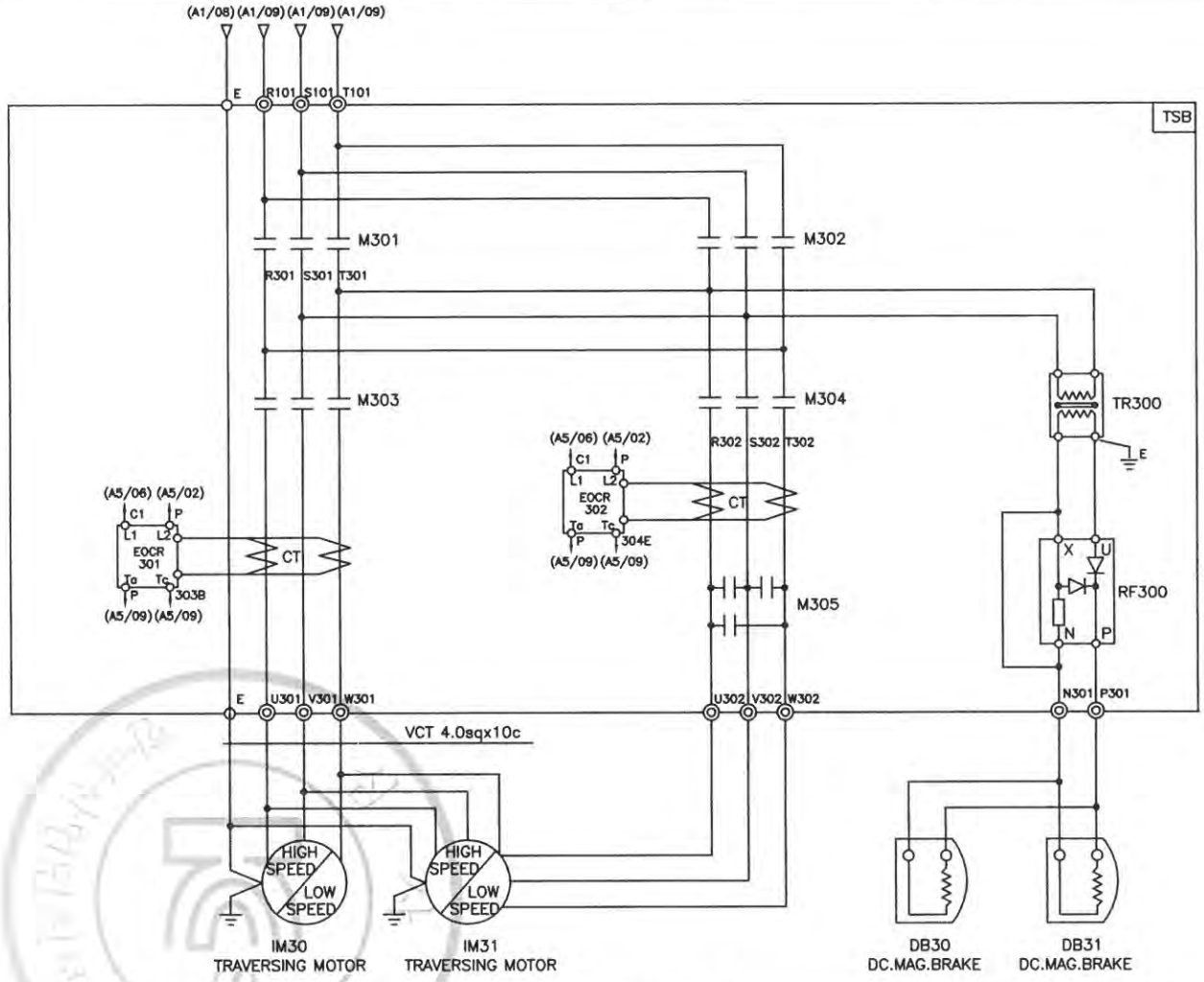

SPECIFICATION / SYMBOLS / DESCRIPTION		TRAVERSING MOTOR	DC MAG' BRAKE	MAGNET CONTACTOR		SILICON RECTIFIER	ELECTRIC OVER CURRENT RELAY	TRANSFORMER
		IM 30 , 31	DB30 , 31	M301 , M302 , M303,	M304, M305	RF 300	EOCR 301,302	TR300
	460V	1.5/0.75KWx4/8P AC3PH 460V 60Hz	DC 100V	DMC22b	DMC22b	SR-30	SS-30	AC460/220V, 500VA
	460V	1.0/0.5KWx6/12P AC3PH 460V 60Hz	DC 100V	DMC22b	DMC22b	SR-30	SS-30	AC460/220V, 500VA
SELECTION MAKER		KUKDONG		DONG-A		ASECO		SHINHAN

MK	DATE	REVISIONS	CHK.	APP.	CUSTOMER		DRAWING	DESIGN	CHECKED	APPROVED	SCALE	DATE	ORDER NO.
4													
3													
2					DRAWING TITLE	TRAVERSING POWER CONTROL CIRCUIT					NONE		
1						DIAGRAM	KD 극동호이스트 주식회사 KUK DONG HOIST CO., LTD.				DWG. NO	KD15E56	

192.168.11.51 / 2019-05-21 13:51:47

불법복제 및 배포금지

1	2	3	4	5	6	7	8	9	10	11	12	13	14	15	16	17	18	19	20.

ADR'S NO.

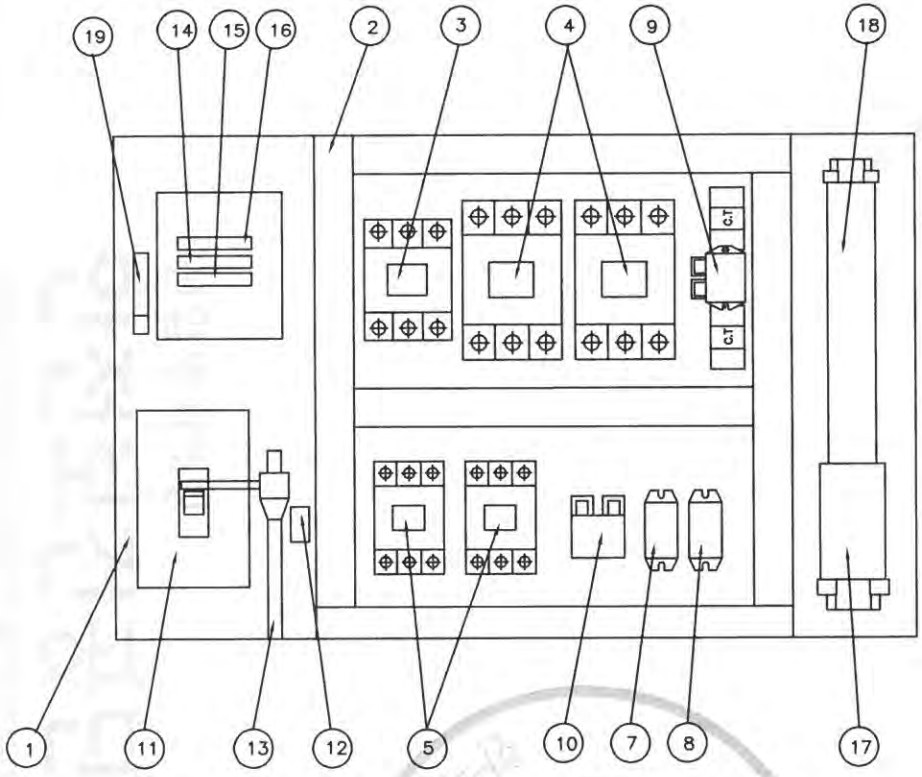

NO	DESCRIPTION	SPECIFICATION	Q'TY	REMARK
1	CHASSIS PLATE		1	아 연 도 금
2	CABLE DUCT	–	1	
3	MAGNET CONTACT	DMC50	1	M1, MAIN MAG.
4	MAGNET CONTACT	DMC85	2	HOISTING
5	MAGNET CONTACT	DMC22b	2	TRAVERSING
7	SILICON RECTIFIER	SR–60	1	HOISTING
8	SILICON RECTIFIER	SR–30	1	TRAVERSING
9	E.O.C.R	SS–60	1	HOISTING
10	E.O.C.R	SS–05 (30M : SS–30)	1	TRAVERSING
11	MCCB100	53AF/40AT	1	LS–2
12	UPPER LIMIT	AC 600V/3A	1	LS–1
13	LIMIT LEVER	SS–400	1	
14	FUSE (F11,F12)	2 A	2	
15	FUSE (F13)	5 A	1	
16	TRANSFORMER	480V/110,120V, 200VA	1	
17	TERMINAL BLOCK	60A,25A		
18	TERMINAL BLOCK	15A		
19	EARTH TERMINAL	5tx25x50	1	

– 주행 포함 시 3. MAIN MAG. 삭제 –

NOTE

1. UPPER LIMIT LS–1의 접점 허용 전류 용량. : AC 600V, 3A
2. UPPER LIMIT LS–2의 접점 허용 전류 용량. : NFB 53AF
3. EARTH TERMINAL RESISTANCE : 0.018 Ω
4. POWER SOURCE : AC. 3ø 480V 60HZ

NOTE

1. 전선의 색상은 다음과 같다.
   1) 흑색 : 고류 및 직류 전원선로
   2) 적색 : 고류제어회로
   3) 주황색 : 외부 전원에서 공급되는 연동장치 제어회로
   4) 녹색 또는 녹색과 황색 혼용 : 접지선
   5) 청색 : 직류 제어선로
2. CABLE MATERIAL : KIV OR EQUIVALENT / MIN SIZE : 1.5sq
3. 제어용 전선 : 1.5mm KIV,HIV
4. 제작시 다소 변경 될수있음.
5. 외함 개방구조는 다음과 같을것.
   1) 외함 개방시 충전부분이 차단되도록 할것.
   2) 외함 개방후 충전되어있는 부분은 IP2X 이상의 직접 접촉 방호가 되어있을것.

MK	DATE	REVISIONS	CHK.	APP.
4				
3				
2				
1				

CUSTOMER	
DRAWING TITLE	HOISTING CONTROL BOX ARRANGEMENT DRAWING

DRAWING	DESIGN	CHECKED	APPROVED	SCALE	DATE	ORDER NO.
				NONE		

극동호이스트 주식회사
KUK DONG HOIST CO., LTD.

DWG. NO KD15BA61

192.168.11.51 / 2019-05-21 13:51:47

불법복제 및 배포금지

1	2	3	4	5	6	7	8	9	10	11	12	13	14	15	16	17	18	19	20
POWER CIRCUIT																			ADR'S NO.
HOISTING MOTION										TRAVERSING MOTION									B1

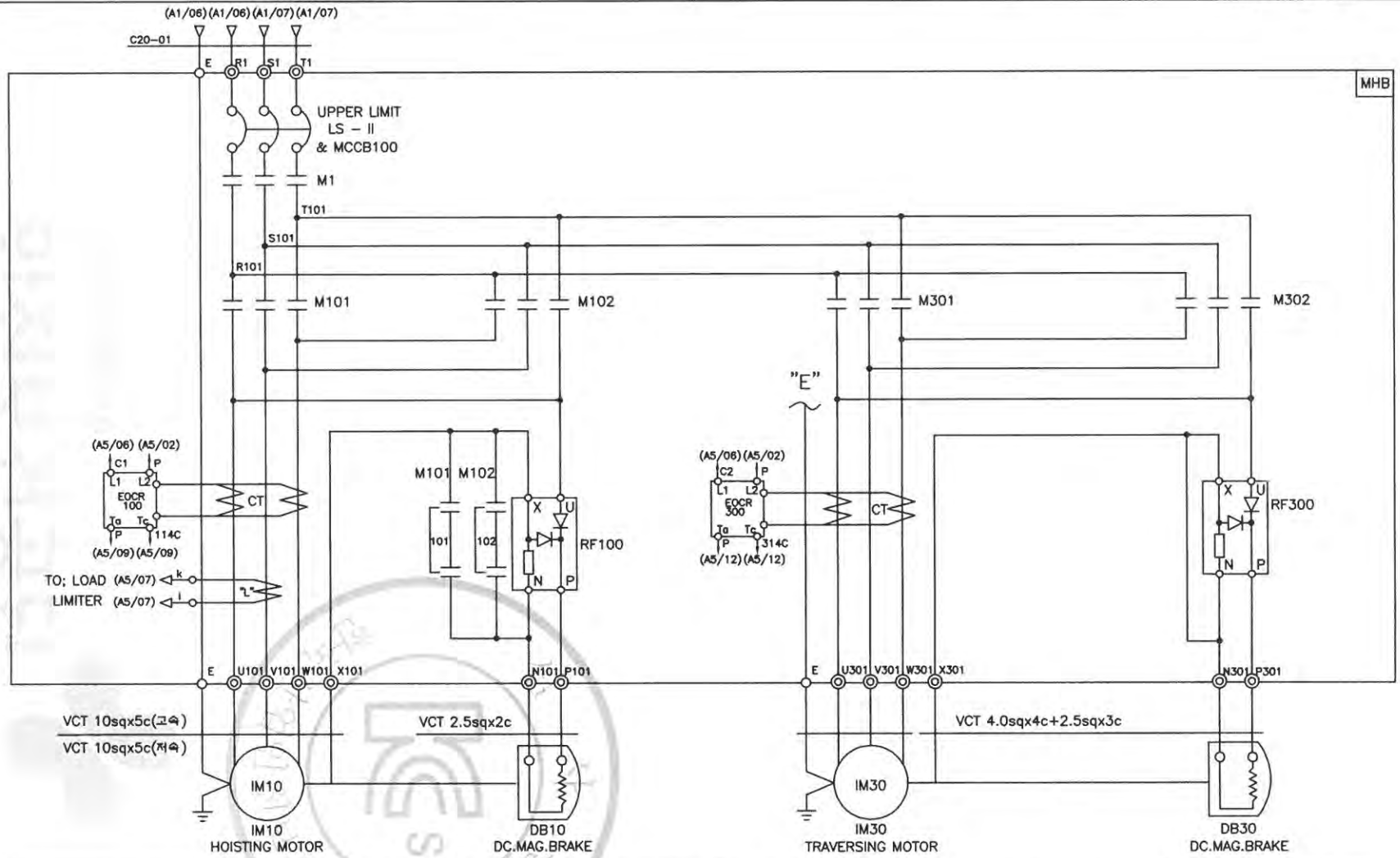

SPECIFICATION / SYMBOLS / DESCRIPTION	HOISTING POWER	HOISTING MOTOR	TRAVERSING MOTOR	DC.MAG' BRAKE	NO FUSE BREAKER	TRANSFORMER	FUSE		MAIN MAGNET	MAGNET CONTACTOR		UPPER LIMIT	ELECTRIC OVER CURRENT RELAY		SILICON RECTIFIER		LOAD LIMITER	CABLE
	HOIST	IM 10	IM 30	DB10, 30	LS-II & MCCB100	TR 1	F11,F12	F13	M1	M101,M102	M301,M302	LS-I	EOCR100	EOCR300	RF100	RF300	LOAD LIMITER	C20-01
	15TON AC3PH 480V 60Hz	13KW x 8P	1.5KW x 4P	DC 100V	ABS-53AF/40AT	480/110,120V,200VA	2A	5A	DMC50	DMC85	DMC22b	AC 600V 3A	SS-60	SS-05	SR-60	SR-30	JDL-100	VCT 10sqx4c
	15TON AC3PH 480V 60Hz	8.5KW x 12P	1.0KW x 6P	DC 100V	ABS-53AF/40AT	480/110,120V,200VA	2A	5A	DMC50	DMC85	DMC22b	AC 600V 3A	SS-60	SS-05	SR-60	SR-30	JDL-100	VCT 10sqx4c
SELECTION / MAKER	KUKDONG				LS	SHINHAN	–		DONG-A			KUKDONG	ASECO				JUNGHO	DONGIL

MK	DATE	REVISIONS	CHK.	APP.
4				
3				
2				
1				

CUSTOMER		DRAWING	DESIGN	CHECKED	APPROVED	SCALE	DATE	ORDER NO.
DRAWING TITLE	HOISTING & T/S POWER CONTROL CIRCUIT DIAGRAM					NONE		
		극동호이스트 주식회사 KUK DONG HOIST CO., LTD.				DWG. NO	KD15E61	

192.168.11.51 / 2019-05-21 13:51:47

불법복제 및 배포금지

1	2	3	4	5	6	7	8	9	10	11	12	13	14	15	16	17	18	19	20
POWER CIRCUIT																			ADR'S NO.
HOISTING MOTION										TRAVERSING MOTION									B1

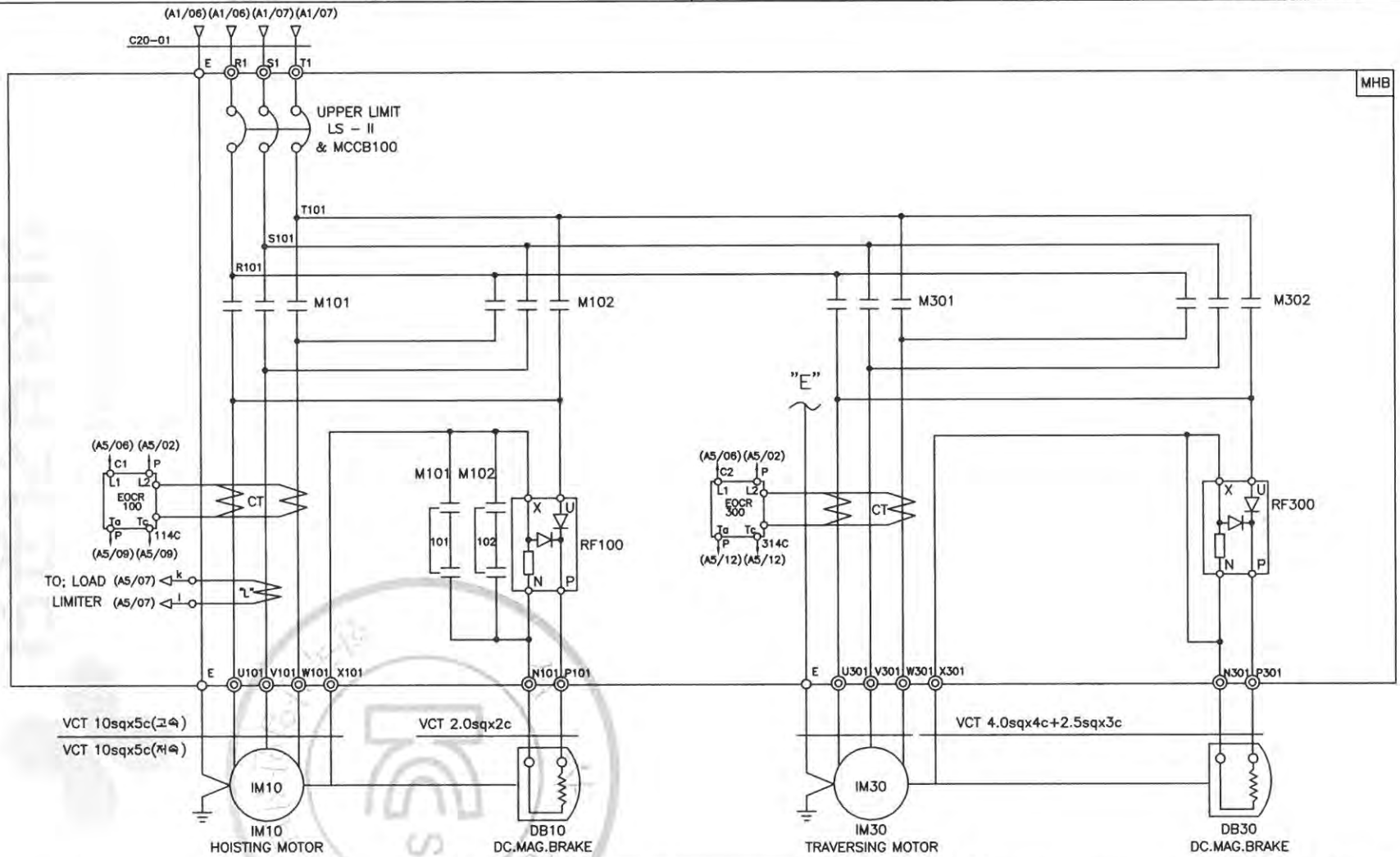

SPECIFICATION / SYMBOLS / DESCRIPTION	HOISTING POWER	HOISTING MOTOR	TRAVERSING MOTOR	DC.MAG' BRAKE	NO FUSE BREAKER	TRANSFORMER	FUSE		MAGNET CONTACTOR		UPPER LIMIT	ELECTRIC OVER CURRENT RELAY		SILICON RECTIFIER		LOAD LIMITER	CABLE
	HOIST	IM 10	IM 30	DB10, 30	LS-II & MCCB100	TR 1	F11,F12	F13	M101,M102	M301,M302	LS-I	EOCR100	EOCR300	RF100	RF300	LOAD LIMITER	C20-01
	15TON AC3PH 480V 60Hz	13KW x 8P	1.5KW x 4P	DC 100V	ABS-53AF/40AT	480/110,120V,200VA	2A	5A	DMC85	DMC22b	AC 600V 3A	SS-60	SS-05	SR-60	SR-30	JDL-100	VCT 10sqx4c
	15TON AC3PH 480V 60Hz	8.5KW x 12P	1.0KW x 6P	DC 100V	ABS-53AF/40AT	480/110,120V,200VA	2A	5A	DMC85	DMC22b	AC 600V 3A	SS-60	SS-05	SR-60	SR-30	JDL-100	VCT 10sqx4c
SELECTION / MAKER	KUKDONG				LS	SHINHAN	-		DONG-A		KUKDONG	ASECO				JUNGHO	DONGIL

MK	DATE	REVISIONS	CHK.	APP.
4				
3				
2				
1				

CUSTOMER		DRAWING	DESIGN	CHECKED	APPROVED	SCALE	DATE	ORDER NO.
DRAWING TITLE	HOISTING & T/S POWER CONTROL CIRCUIT DIAGRAM					NONE		
		극동호이스트 주식회사 KUK DONG HOIST CO., LTD.				DWG. NO	KD15E62	

192.168.11.51 / 2019-05-21 13:51:47

불법복제 및 배포금지

1	2	3	4	5	6	7	8	9	10	11	12	13	14	15	16	17	18	19	20
POWER CIRCUIT																			ADR'S NO.
HOISTING MOTION										TRAVERSING MOTION									B1

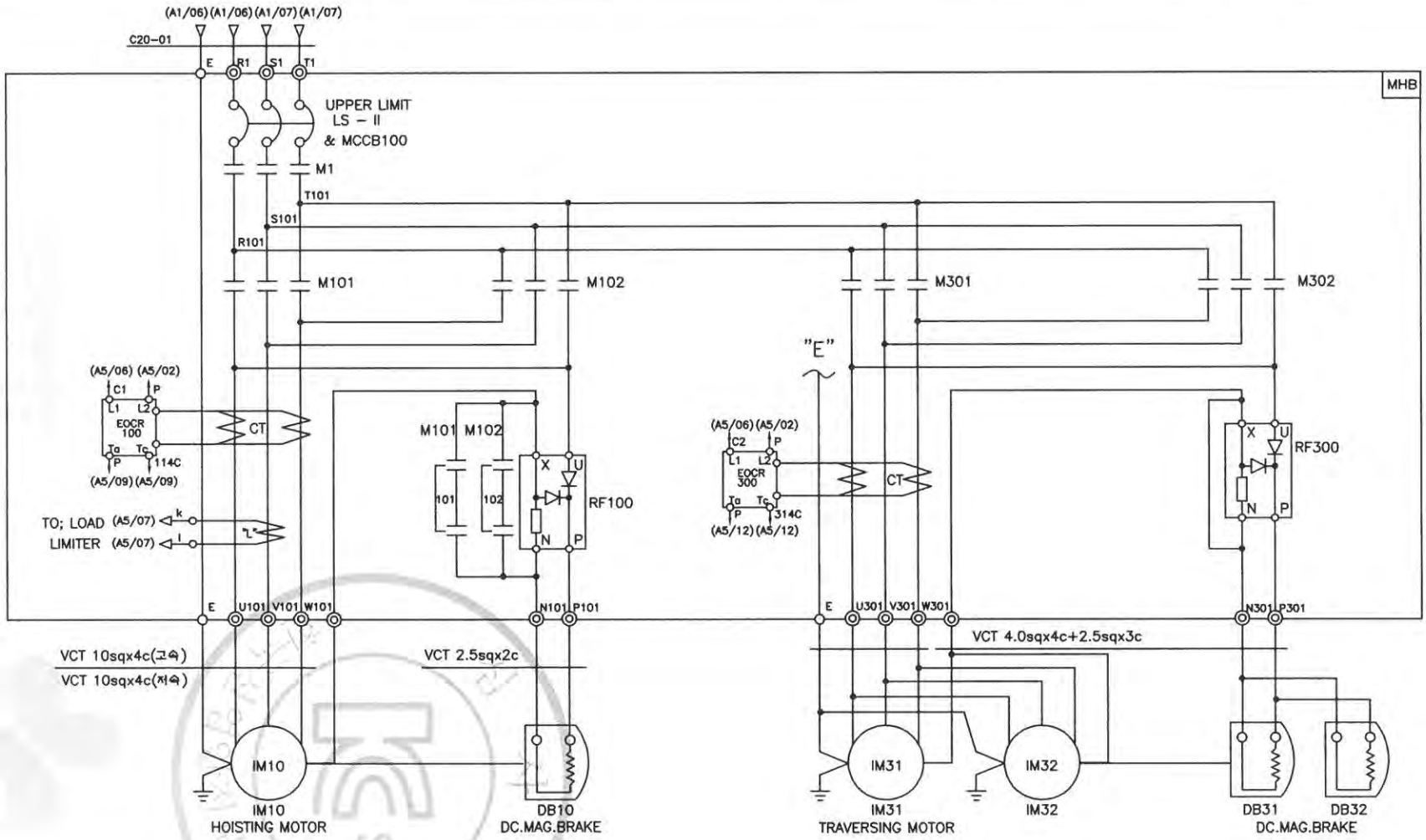

SPECIFICATION / SYMBOLS / DESCRIPTION	HOISTING POWER	HOISTING MOTOR	TRAVERSING MOTOR	DC.MAG' BRAKE	NO FUSE BREAKER	TRANSFORMER	FUSE		MAIN MAGNET	MAGNET CONTACTOR		UPPER LIMIT	ELECTRIC OVER CURRENT RELAY		SILICON RECTIFIER		LOAD LIMITER	CABLE
	HOIST	IM 10	IM 31,32	DB10,31,32	LS-II & MCCB100	TR 1	F11,F12	F13	M1	M101,M102	M301,M302	LS-I	EOCR100	EOCR300	RF100	RF300	LOAD LIMITER	C20-01
	15TON AC3PH 480V 60Hz	13KW x 8P	1.5KW x 4P	DC 100V	ABS-53AF/40AT	480/110,120V,200VA	2A	5A	DMC50	DMC85	DMC22b	AC 600V 3A	SS-60	SS-30	SR-60	SR-30	JDL-100	VCT 10sqx4c
	15TON AC3PH 480V 60Hz	8.5KW x 12P	1.0KW x 6P	DC 100V	ABS-53AF/40AT	480/110,120V,200VA	2A	5A	DMC50	DMC85	DMC22b	AC 600V 3A	SS-60	SS-30	SR-60	SR-30	JDL-100	VCT 10sqx4c
SELECTION / MAKER	KUKDONG				LS	SHINHAN	–		DONG-A			KUKDONG	ASECO				JUNGHO	DONGIL

MK	DATE	REVISIONS	CHK.	APP.
4				
3				
2				
1				

CUSTOMER		DRAWING	DESIGN	CHECKED	APPROVED	SCALE	DATE	ORDER NO.
DRAWING TITLE	HOISTING & T/S POWER CONTROL CIRCUIT DIAGRAM					NONE		
		극동호이스트 주식회사 KUK DONG HOIST CO., LTD.				DWG. NO	KD15E63	

192.168.11.51 / 2019-05-21 13:51:47

불법복제 및 배포금지

1	2	3	4	5	6	7	8	9	10	11	12	13	14	15	16	17	18	19	20
POWER CIRCUIT																			ADR'S NO.
HOISTING MOTION										TRAVERSING MOTION									B1

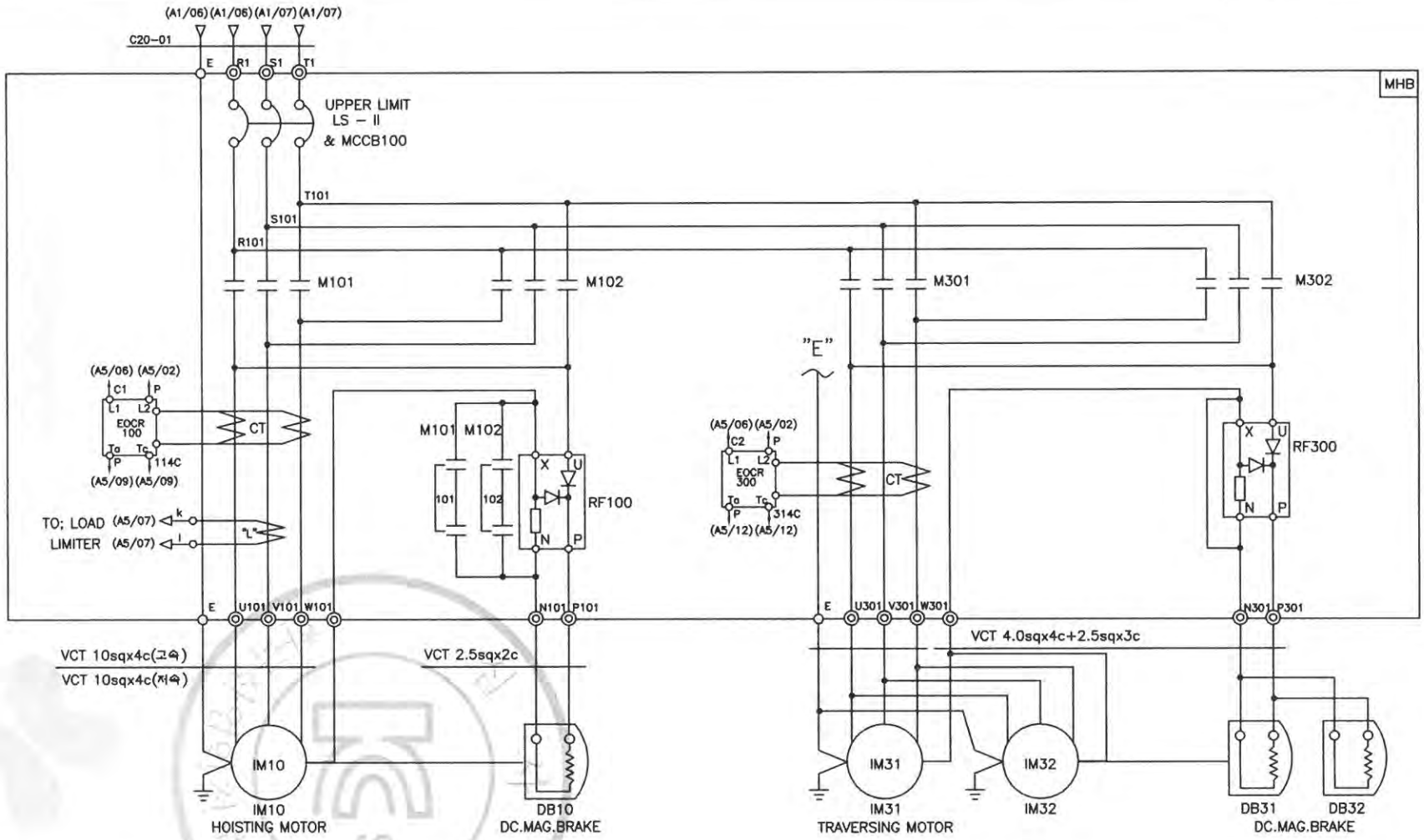

SPECIFICATION / SYMBOLS / DESCRIPTION	HOISTING POWER	HOISTING MOTOR	TRAVERSING MOTOR	DC.MAG' BRAKE	NO FUSE BREAKER	TRANSFORMER	FUSE		MAGNET CONTACTOR		UPPER LIMIT	ELECTRIC OVER CURRENT RELAY		SILICON RECTIFIER		LOAD LIMITER	CABLE
	HOIST	IM 10	IM 31,32	DB10,31,32	LS-II & MCCB100	TR 1	F11,F12	F13	M101,M102	M301,M302	LS-I	EOCR100	EOCR300	RF100	RF300	LOAD LIMITER	C20-01
	15TON AC3PH 480V 60Hz	13KW x 8P	1.5KW x 4P	DC 100V	ABS-53AF/40AT	480/110,120V,200VA	2A	5A	DMC85	DMC22b	AC 600V 3A	SS-60	SS-30	SR-60	SR-30	JDL-100	VCT 10sqx4c
	15TON AC3PH 480V 60Hz	8.5KW x 12P	1.0KW x 6P	DC 100V	ABS-53AF/40AT	480/110,120V,200VA	2A	5A	DMC85	DMC22b	AC 600V 3A	SS-60	SS-30	SR-60	SR-30	JDL-100	VCT 10sqx4c
SELECTION / MAKER	KUKDONG				LS	SHINHAN	–		DONG-A		KUKDONG	ASECO				JUNGHO	DONGIL

MK	DATE	REVISIONS	CHK.	APP.
4				
3				
2				
1				

CUSTOMER		DRAWING	DESIGN	CHECKED	APPROVED	SCALE	DATE	ORDER NO.
DRAWING TITLE	HOISTING & T/S POWER CONTROL CIRCUIT DIAGRAM					NONE		
		극동호이스트 주식회사 KUK DONG HOIST CO., LTD.				DWG. NO	KD15E64	

불법복제 및 배포금지

192.168.11.51 / 2019-05-21 13:51:47

1	2	3	4	5	6	7	8	9	10	11	12	13	14	15	16	17	18	19	20
POWER CIRCUIT																			ADR'S NO.
TRAVERSING MOTION																			C2

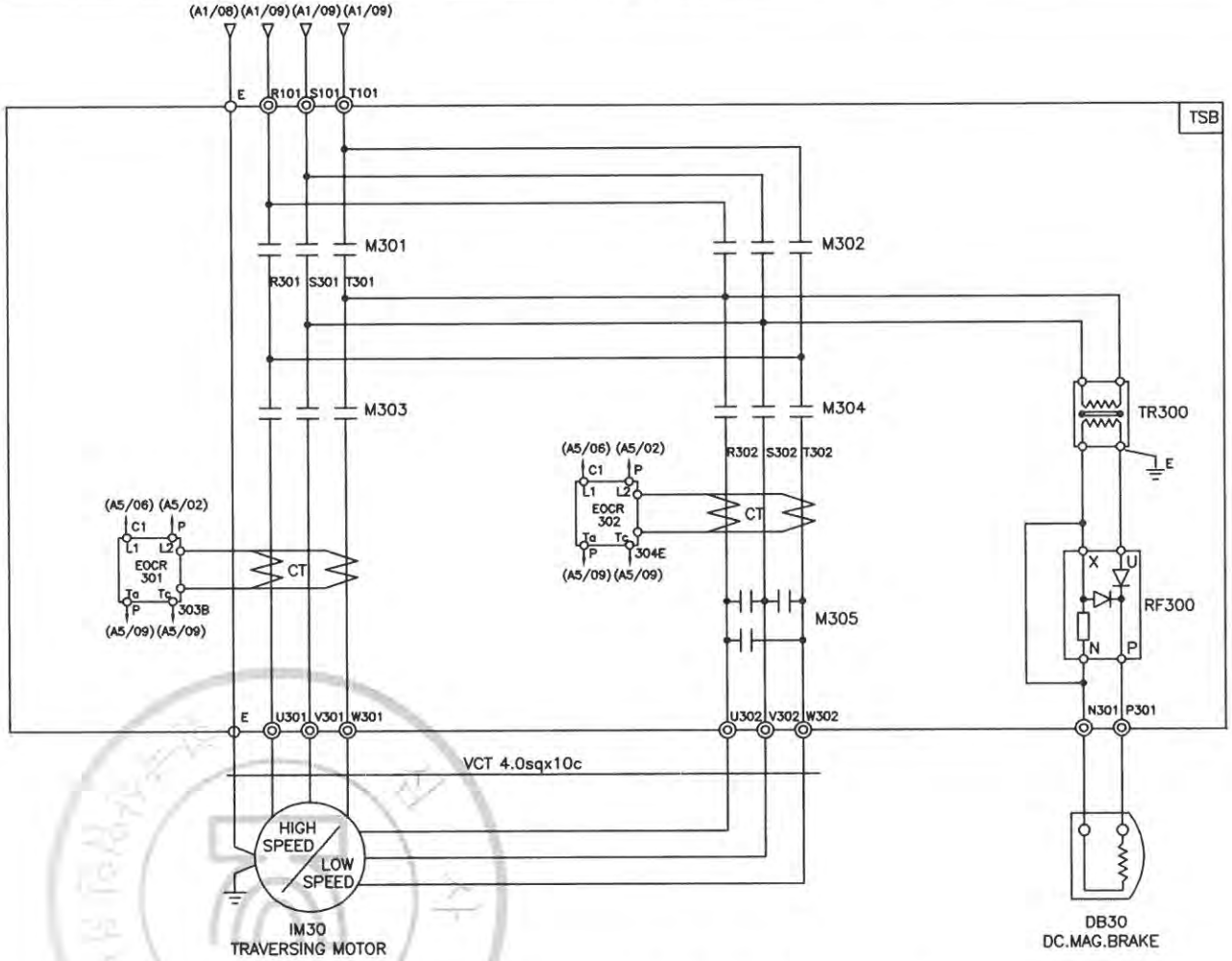

SPECIFICATION / SYMBOLS / DESCRIPTION		TRAVERSING MOTOR	DC MAG' BRAKE	MAGNET CONTACTOR		SILICON RECTIFIER	ELECTRIC OVER CURRENT RELAY	TRANSFORMER
		IM 30	DB30	M301 , M302 , M303,	M304, M305	RF 300	EOCR 301,302	TR300
	480V	1.5/0.75KWx4/8P AC3PH 480V 60Hz	DC 100V	DMC22b	DMC22b	SR-30	SS-05	AC480/220V, 300VA
	480V	1.0/0.5KWx6/12P AC3PH 480V 60Hz	DC 100V	DMC22b	DMC22b	SR-30	SS-05	AC480/220V, 300VA
SELECTION MAKER		KUKDONG		DONG-A		ASECO		SHINHAN

4					CUSTOMER		DRAWING	DESIGN	CHECKED	APPROVED	SCALE	DATE	ORDER NO.
3											NONE		
2					DRAWING TITLE	TRAVERSING POWER CONTROL CIRCUIT							
1						DIAGRAM	KD 극동호이스트 주식회사 KUK DONG HOIST CO., LTD.				DWG. NO	KD15E65
MK	DATE	REVISIONS	CHK.	APP.								

192.168.11.51 / 2019-05-21 13:51:47

불법복제 및 배포금지

1	2	3	4	5	6	7	8	9	10	11	12	13	14	15	16	17	18	19	20
POWER CIRCUIT																			ADR'S NO.
TRAVERSING MOTION																			C2

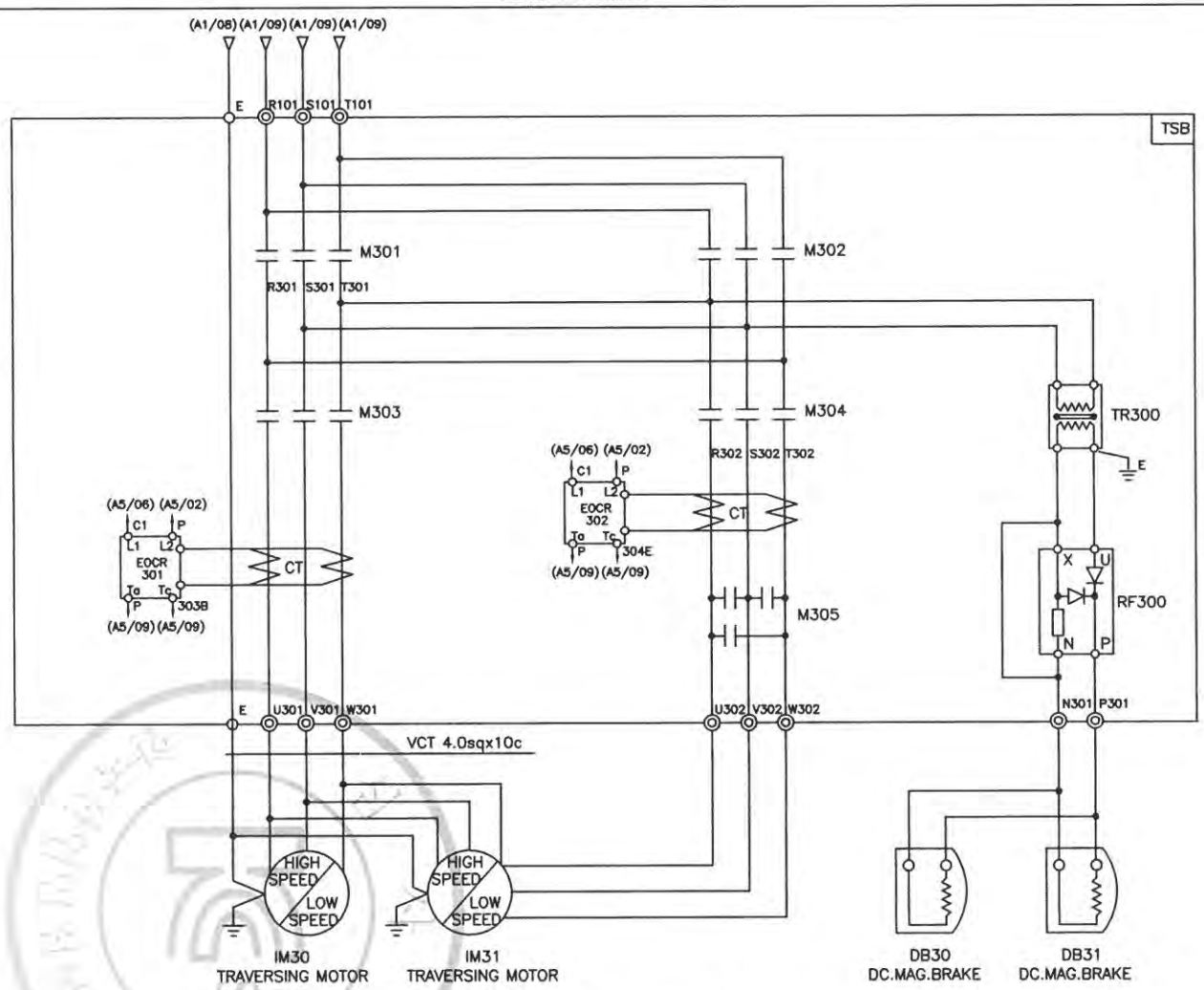

SPECIFICATION / SYMBOLS / DESCRIPTION		TRAVERSING MOTOR	DC MAG' BRAKE	MAGNET CONTACTOR		SILICON RECTIFIER	ELECTRIC OVER CURRENT RELAY	TRANSFORMER
		IM 30 , 31	DB30 , 31	M301 , M302 , M303,	M304, M305	RF 300	EOCR 301,302	TR300
	480V	1.5/0.75KWx4/8P AC3PH 480V 60Hz	DC 100V	DMC22b	DMC22b	SR-30	SS-30	AC480/220V, 500VA
	480V	1.0/0.5KWx6/12P AC3PH 480V 60Hz	DC 100V	DMC22b	DMC22b	SR-30	SS-30	AC480/220V, 500VA
SELECTION / MAKER		KUKDONG		DONG-A		ASECO		SHINHAN

MK	DATE	REVISIONS	CHK.	APP.
4				
3				
2				
1				

CUSTOMER		DRAWING	DESIGN	CHECKED	APPROVED	SCALE	DATE	ORDER NO.
DRAWING TITLE	TRAVERSING POWER CONTROL CIRCUIT DIAGRAM					NONE		
		KD 극동호이스트 주식회사 KUK DONG HOIST CO., LTD.				DWG. NO	KD15E66	

불법복제 및 배포금지

192.168.11.51 / 2019-05-21 13:51:47

1	2	3	4	5	6	7	8	9	10	11	12	13	14	15	16	17	18	19	20.
CONTROL CIRCUIT																			ADR'S NO.
EM, STOP				OVER LOAD BUZZER				UP		DOWN		EAST		WEST					A5

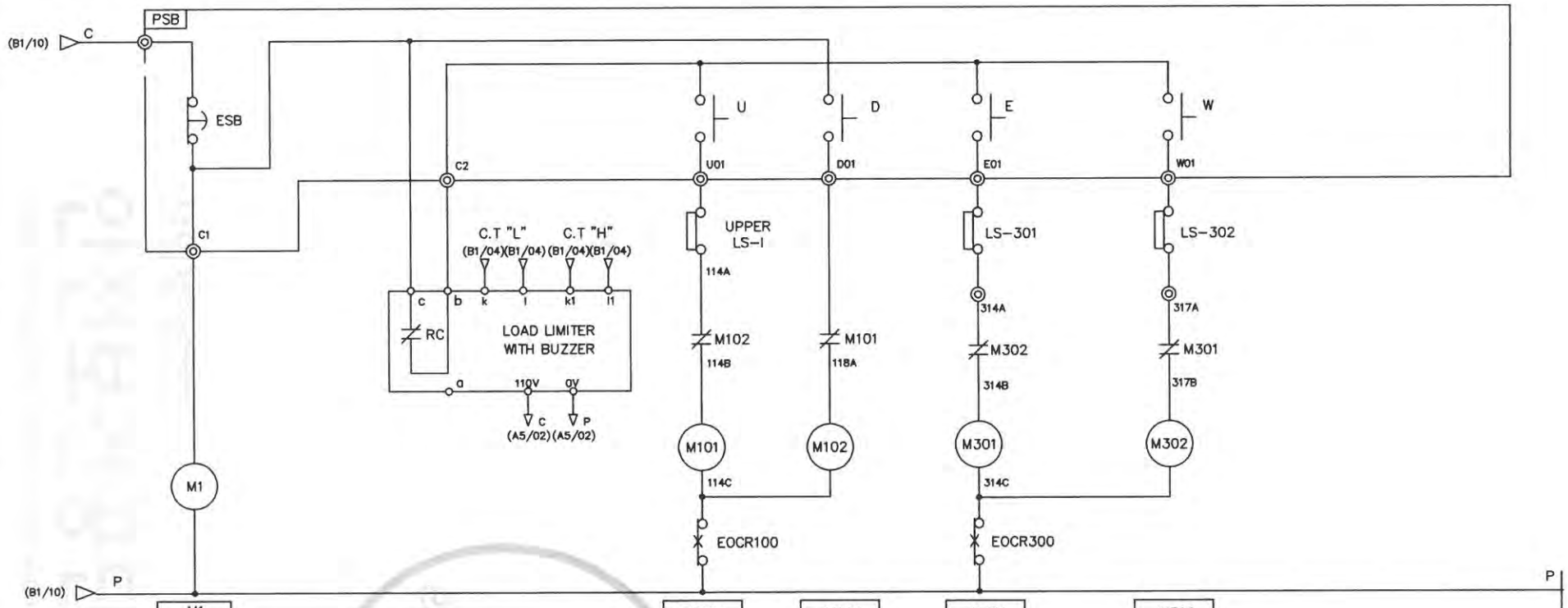

M1	
A	B1/05
A	B1/06
A	B1/06
a	
a	
b	
b	

M101	
A	B1/05
A	B1/05
A	B1/05
a	B1/07
a	B1/07
b	A5/11
b	

M102	
A	B1/08
A	B1/08
A	B1/08
a	B1/08
a	B1/08
b	A5/09
b	

M301	
A	B1/12
A	B1/12
A	B1/12
a	
a	
b	A5/15
b	

M302	
A	B1/16
A	B1/16
A	B1/16
a	
a	
b	A5/12
b	

SPECIFICATION / SYMBOLS / DESCRIPTION	UPPER LIMIT	EMERGENCY S/W	LOAD LIMITER	LIMIT SWITCH
	LS-1	E.S.B	LOAD LIMITER	LS-301,302
	AC 600V 3A	250V 3A	JDL-100	KG-L001
MAKER	KUKDONG	KG-AUTO	JUNG-HO	KG-AUTO

MK	DATE	REVISIONS	CHK.	APP.
4				
3				
2				
1				

CUSTOMER		DRAWING	DESIGN	CHECKED	APPROVED	SCALE	DATE	ORDER NO.
DRAWING TITLE	MAIN POWER 2 & CONTROL CIRCUIT DIAGRAM					NONE		
		극동호이스트 주식회사 KUK DONG HOIST CO., LTD.				DWG. NO	KD15E002	

192.168.11.51 / 2019-05-21 13:51:47

무단복제 및 배포금지

1	2	3	4	5	6	7	8	9	10	11	12	13	14	15	16	17	18	19	20.
CONTROL CIRCUIT																			ADR'S NO.
EM, STOP				OVER LOAD BUZZER				UP		DOWN		EAST		WEST		SOUTH		NORTH	A5

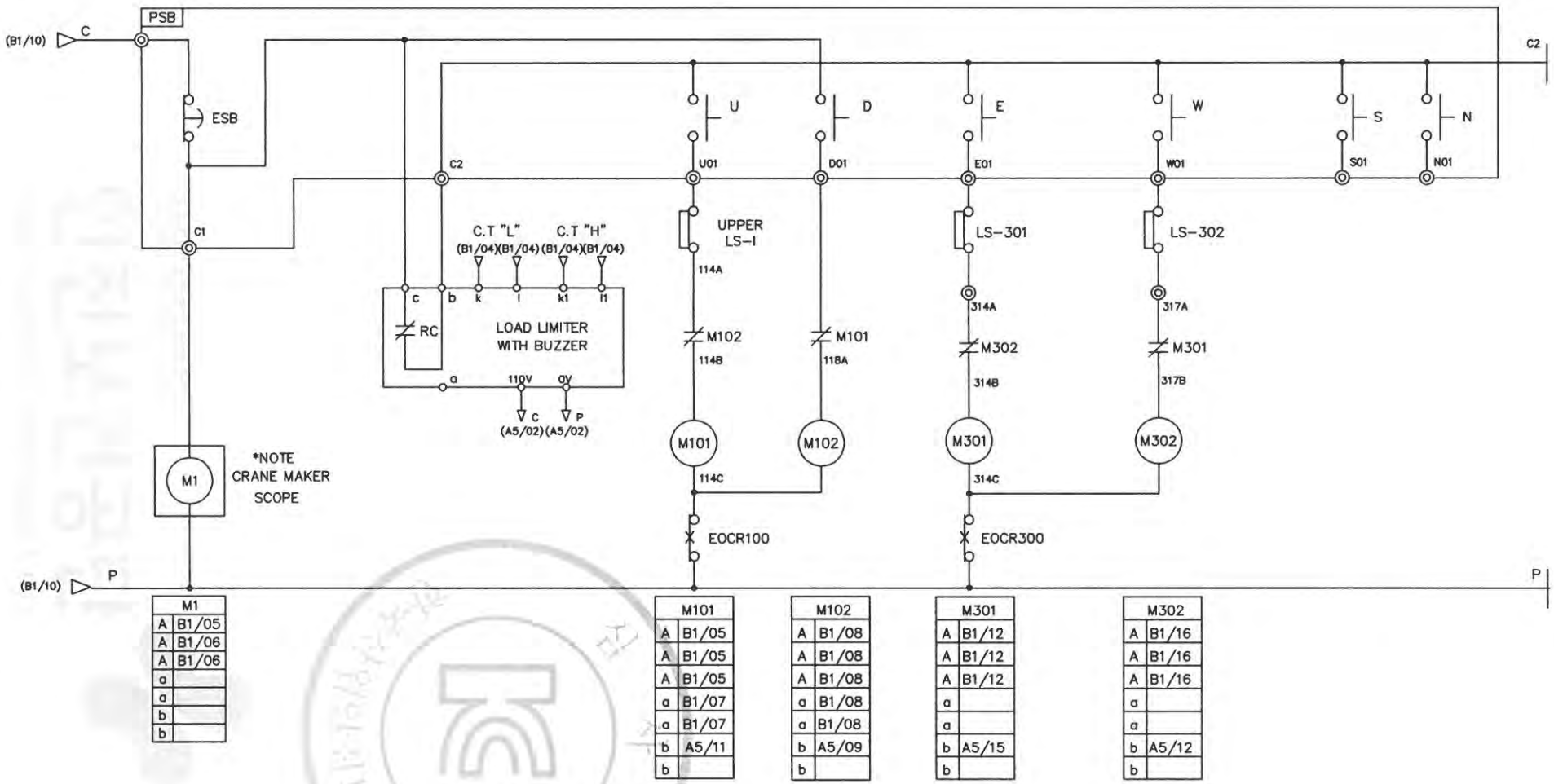

M1	
A	B1/05
A	B1/06
A	B1/06
a	
a	
b	
b	

M101	
A	B1/05
A	B1/05
A	B1/05
a	B1/07
a	B1/07
b	A5/11
b	

M102	
A	B1/08
A	B1/08
A	B1/08
a	B1/08
a	B1/08
b	A5/09
b	

M301	
A	B1/12
A	B1/12
A	B1/12
a	
a	
b	A5/15
b	

M302	
A	B1/16
A	B1/16
A	B1/16
a	
a	
b	A5/12
b	

SPECIFICATION / SYMBOLS / DESCRIPTION	UPPER LIMIT	EMERGENCY S/W	LOAD LIMITER	LIMIT SWITCH
	LS-1	E.S.B	LOAD LIMITER	LS-301,302
	AC 600V 3A	250V 3A	JDL-100	KG-L001
MAKER	KUKDONG	KG-AUTO	JUNG-HO	KG-AUTO

MK	DATE	REVISIONS	CHK.	APP.
4				
3				
2				
1				

CUSTOMER		DRAWING	DESIGN	CHECKED	APPROVED	SCALE	DATE	ORDER NO.
DRAWING TITLE	MAIN POWER 2 & CONTROL CIRCUIT DIAGRAM					NONE		
		극동호이스트 주식회사 KUK DONG HOIST CO., LTD.				DWG. NO	KD15E003	

불법복제 및 배포금지

192.168.11.51 / 2019-05-21 13:51:47

1	2	3	4	5	6	7	8	9	10	11	12	13	14	15	16	17	18	19	20.
CONTROL CIRCUIT																			ADR'S NO.
EM, STOP			LOAD LIMIT			UP		DOWN	EAST (LOW SPEED)			WEST (LOW SPEED)			HIGH SPEED		SOUTH	NORTH	A6

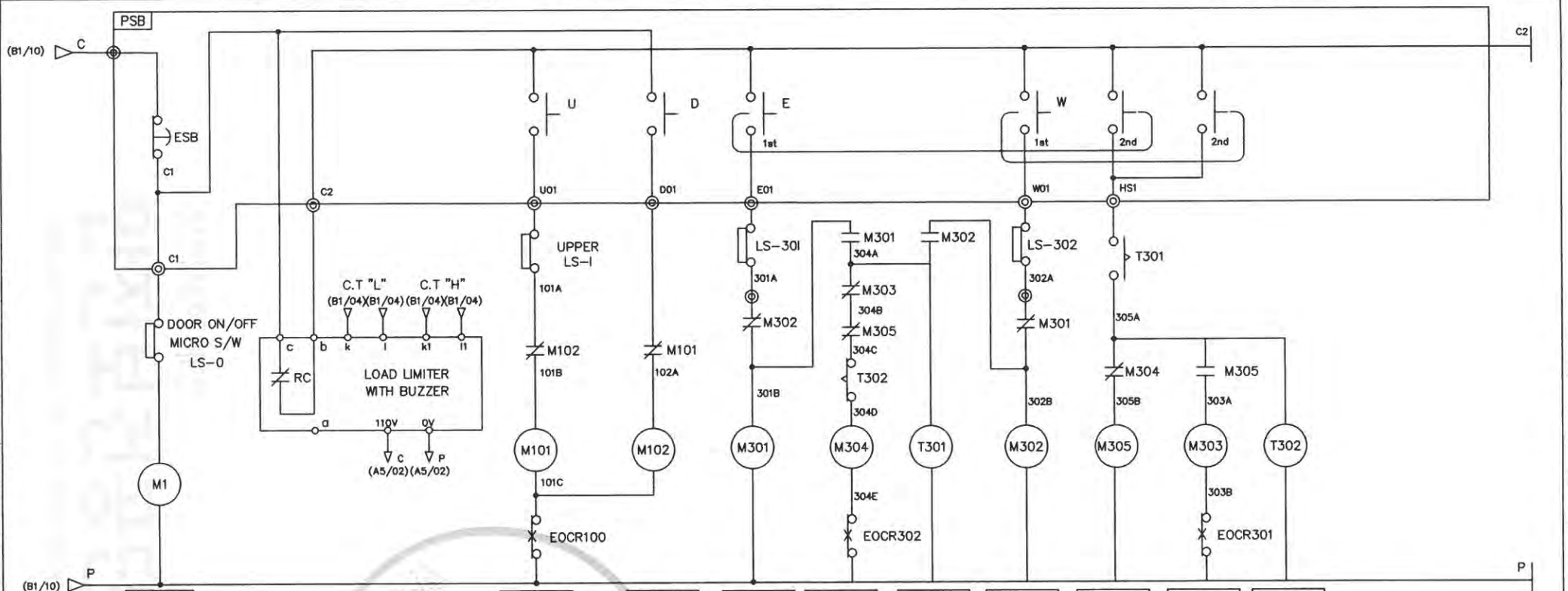

M1	
A	B1/05
A	B1/06
A	B1/06
a	
a	
b	
b	

M101	
A	B1/05
A	B1/05
A	B1/05
a	B1/07
a	B1/07
b	A6/09
b	

M102	
A	B1/08
A	B1/08
A	B1/08
a	B1/08
a	B1/08
b	A6/07
b	

M301	
A	C2/07
A	C2/07
A	C2/08
a	
a	
b	A6/14
b	

M304	
A	C2/11
A	C2/12
A	C2/12
a	
a	
b	A6/15
b	

T301	
a	
a	
b	A6/12
b	

M302	
A	C2/11
A	C2/12
A	C2/12
a	
a	
b	A6/10
b	

M305	
A	C2/11
A	C2/12
A	C2/12
a	
a	
b	A6/11
b	

M303	
A	C2/07
A	C2/07
A	C2/08
a	
a	
b	A6/11
b	

T302	
a	
a	
b	A6/17
b	

SPECIFICATION / SYMBOLS / DESCRIPTION	UPPER LIMIT	EMERGENCY S/W	TIME RELAY	LOAD LIMITER	LIMIT SWITCH
	LS-1	E.S.B	T301,302	LOAD LIMITER	LS-301,302
	AC 600V 3A	250V 3A	LA2DT2	JDL-100	KG-L001
MAKER	KUKDONG	KG-AUTO	LS	JUNGHO	KG-AUTO

MK	DATE	REVISIONS	CHK.	APP.
4				
3				
2				
1				

CUSTOMER		DRAWING	DESIGN	CHECKED	APPROVED	SCALE	DATE	ORDER NO.
DRAWING TITLE	MAIN POWER 2 & CONTROL CIRCUIT DIAGRAM					NONE		
		KD 극동호이스트 주식회사 KUK DONG HOIST CO., LTD.				DWG. NO	KD15E004	

192.168.11.51 / 2019-05-21 13:51:47

불법복제 및 배포금지

1	2	3	4	5	6	7	8	9	10	11	12	13	14	15	16	17	18	19	20.
CONTROL CIRCUIT																			ADR'S NO.
EM, STOP			LOAD LIMIT			UP		DOWN	EAST (LOW SPEED)			WEST (LOW SPEED)			HIGH SPEED		SOUTH	NORTH	A6

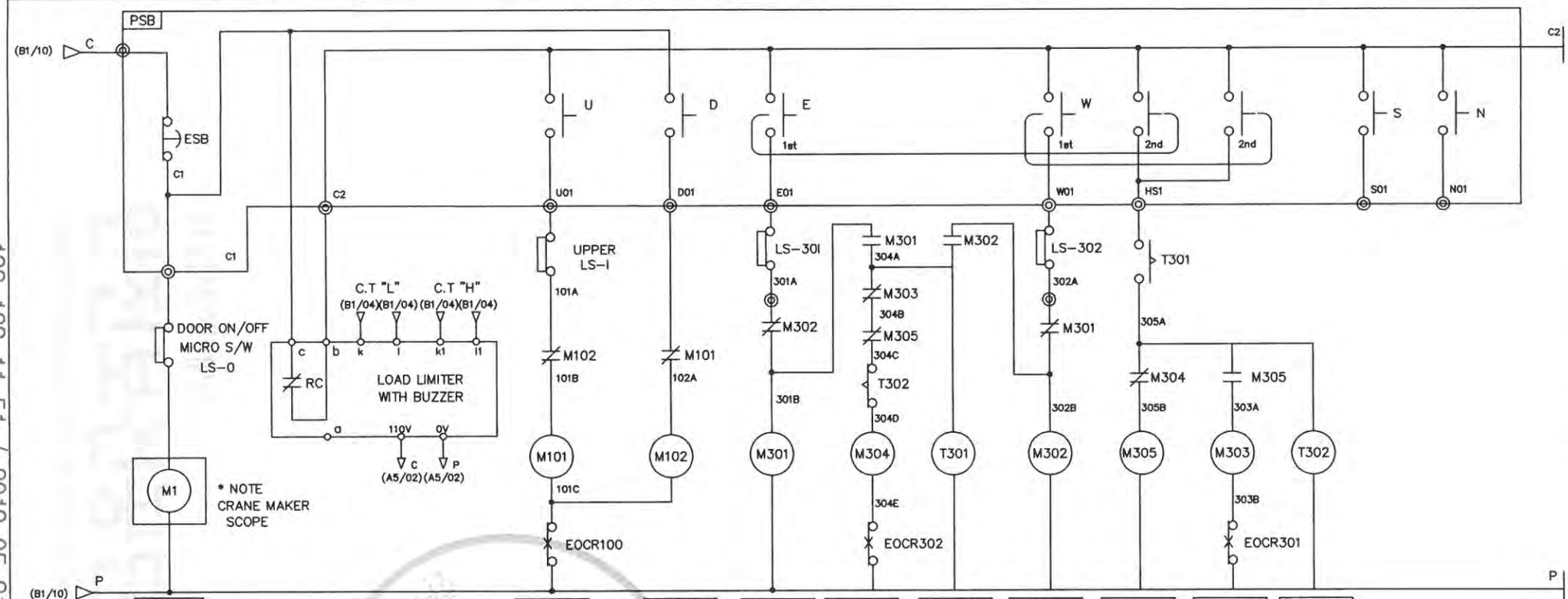

M1	
A	B1/05
A	B1/06
A	B1/06
a	
a	
b	
b	

M101	
A	B1/05
A	B1/05
A	B1/05
a	B1/07
a	B1/07
b	A6/09
b	

M102	
A	B1/08
A	B1/08
A	B1/08
a	B1/08
a	B1/08
b	A6/07
b	

M301	
A	C2/07
A	C2/07
A	C2/08
a	
a	
b	A6/14
b	

M304	
A	C2/11
A	C2/12
A	C2/12
a	
a	
b	A6/15
b	

T301	
a	
a	
b	A6/12
b	

M302	
A	C2/11
A	C2/12
A	C2/12
a	
a	
b	A6/10
b	

M305	
A	C2/11
A	C2/12
A	C2/12
a	
a	
b	A6/11
b	

M303	
A	C2/07
A	C2/07
A	C2/08
a	
a	
b	A6/11
b	

T302	
a	
a	
b	A6/17
b	

SPECIFICATION / SYMBOLS / DESCRIPTION	UPPER LIMIT	EMERGENCY S/W	TIME RELAY	LOAD LIMITER	LIMIT SWITCH
	LS-1	E.S.B	T301,302	LOAD LIMITER	LS-301,302
	AC 600V 3A	250V 3A	LA2DT2	JDL-100	KG-L001
MAKER	KUKDONG	KG-AUTO	LS	JUNGHO	KG-AUTO

MK	DATE	REVISIONS	CHK.	APP.
4				
3				
2				
1				

CUSTOMER		DRAWING	DESIGN	CHECKED	APPROVED	SCALE	DATE	ORDER NO.
DRAWING TITLE	MAIN POWER 2 & CONTROL CIRCUIT DIAGRAM					NONE		
		극동호이스트 주식회사 KUK DONG HOIST CO., LTD.				DWG. NO	KD15E005	

불법복제 및 배포금지

192.168.11.51 / 2019-05-21 13:51:47

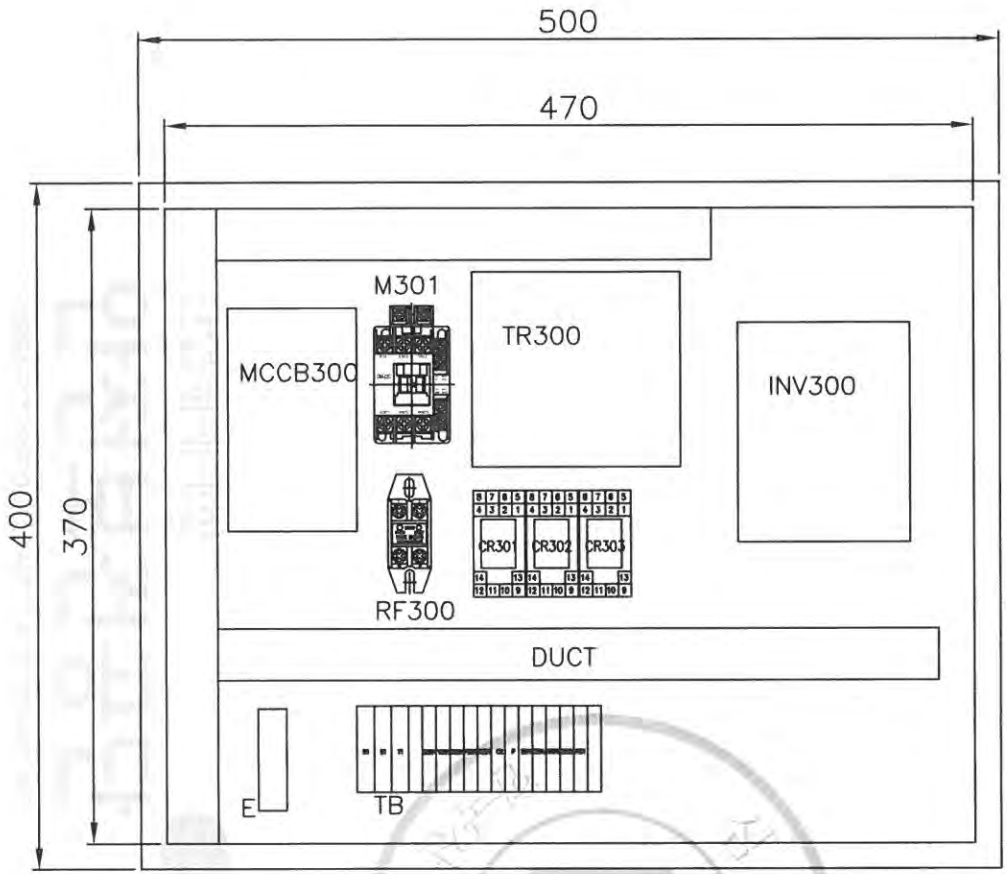

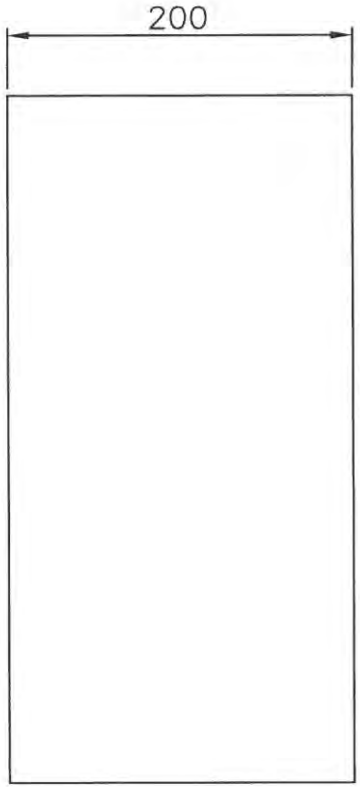

R1	S1	T1		U301	V301	W301	P301	N301	C2	P	E01	R301A	W01	R302A	HS1		

NO.	DESCRIPTION	MT'L	SUB QT'Y	TOTAL QT'Y	SUB WEIGHT(Kg)	TOTAL WEIGHT(Kg)	REMARKS.
2	속판	SS400		1			
1	T/S BOX	PUR		1			
11	EARTH BUS BAR	PUR		1			
10	DUCT	PUR		1			
9	TERMINAL BLOCK	PUR		1			
8	INVERTER	PUR		1			
7	TR	PUR		1			
6	RELAY & SCOKET	PUR		1			
5	RF	PUR		1			
4	MC	PUR		1			
3	MCCB	PUR		1			

PROJECT				DATE	DIM
					mm
TITLE	T/S CONTROL PANEL(INVERTER)			SCALE	PROJECTION
				A3/3	3rd
DRAWN	DESIGNED	CHECKED	APPROVED	REF. DRAWING	

극동호이스트 주식회사
KUK DONG HOIST CO., LTD.

SHEET No.

DWG No. KD15EI001

불법복제 및 배포금지

192.168.11.51 / 2019-05-21 13:51:47

1	2	3	4	5	6	7	8	9	10	11	12	13	14	15	16	17	18	19	20
TRAVERSING MOTION																			ADR'S NO.
POWER CIRCUIT DIAGRAM										CONTROL CIRCUIT DIAGRAM									
												BRAKE		EAST		WEST		HIGH SPEED	

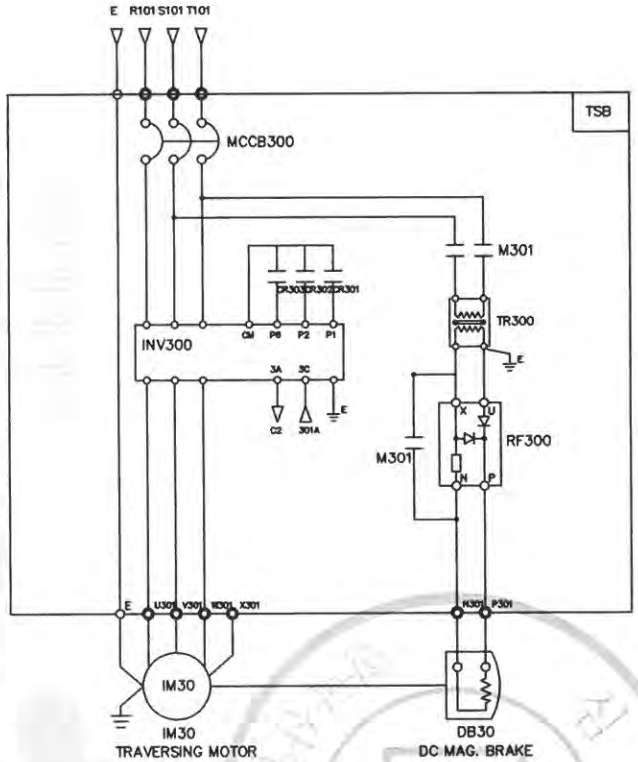

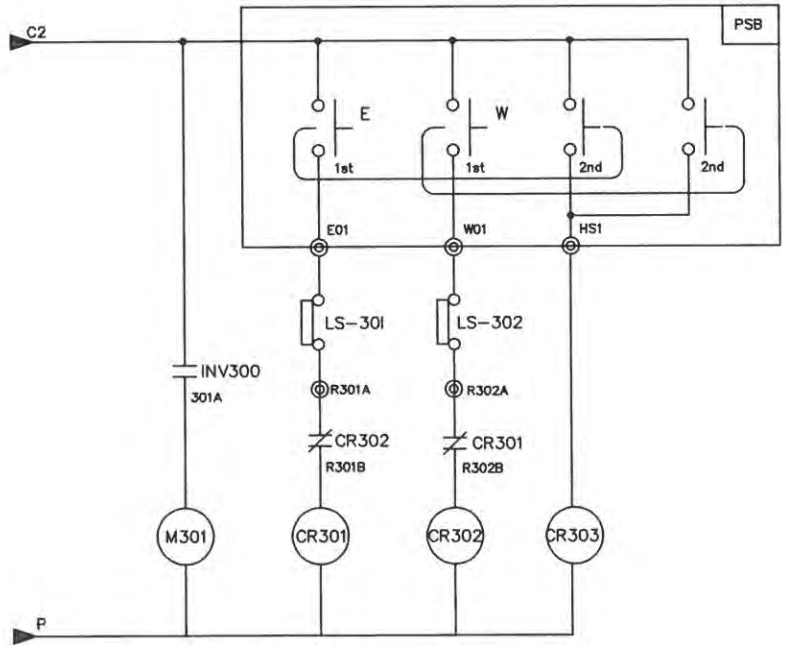

SPECIFICATION / SYMBOLS / DESCRIPTION	TRAVERSING POWER	TRAVERSING MOTOR	DC.MAG' BRAKE	NO FUSE BREAKER	TRANSFORMER	BRAKE MAGNET	CONTROL RELAY	INVERTER	SILICON RECTIFIER	
		IM 30	DB30	MCCB300	TR 300	M301	CR301,302,303	INV300	RF300	
	AC 3PH 220V 60Hz	1.0KW x 6P	DC 100V	ABE-33AF/10AT	-	DMC22b	MINI 4a4b	SV015iG5A-2	SR-30	
	AC 3PH 380(440,460,480)V 60Hz	1.0KW x 6P	DC 100V	ABE-33AF/10AT	380(440,460,480)/220V,300VA	DMC22b	MINI 4a4b	SV015iG5A-4	SR-30	
SELECTION / MAKER	KUK DONG HOIST			LS				LS	ASECO	

MK	DATE	REVISIONS	CHK.	APP.
4				
3				
2				
1				

CUSTOMER	INVERTER CONTROL	DRAWING	DESIGN	CHECKED	APPROVED	SCALE	DATE	ORDER NO.
DRAWING TITLE	TRAVERSING POWER & CONTROL CIRCUIT DIAGRAM							
		극동호이스트 주식회사 KUK DONG HOIST CO., LTD.				DWG. NO	KD15EI002	

192.168.11.51 / 2019-05-21 13:51:47

불법복제 및 배포금지

1	2	3	4	5	6	7	8	9	10	11	12	13	14	15	16	17	18	19	20
TRAVERSING MOTION																			ADR'S NO.
POWER CIRCUIT DIAGRAM									CONTROL CIRCUIT DIAGRAM										
												BRAKE		EAST		WEST		HIGH SPEED	

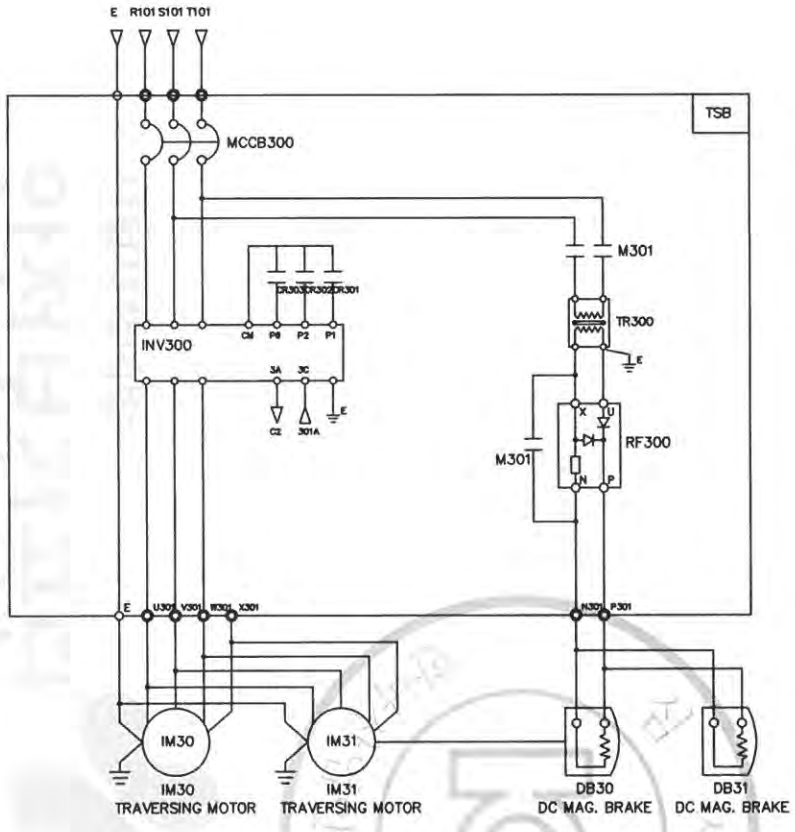

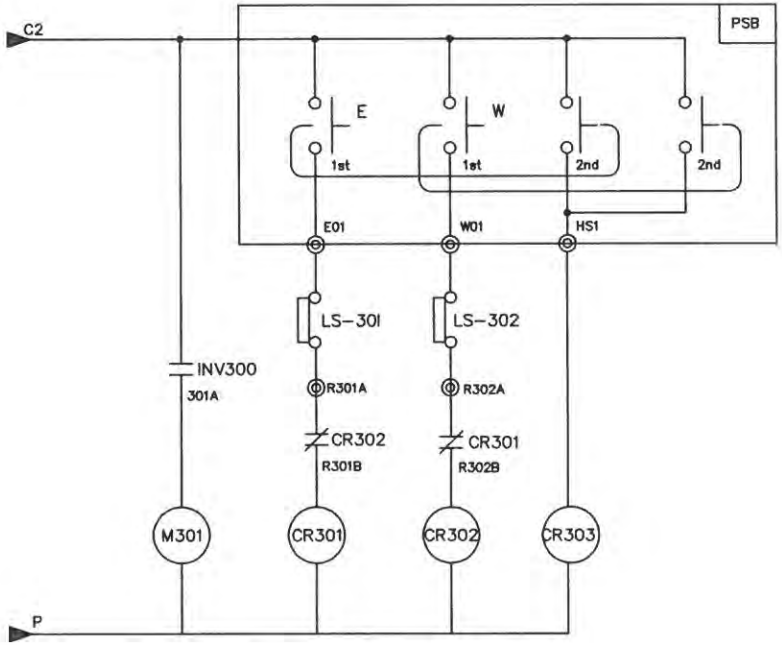

SPECIFICATION / SYMBOLS / DESCRIPTION	TRAVERSING POWER	TRAVERSING MOTOR	DC.MAG' BRAKE	NO FUSE BREAKER	TRANSFORMER	BRAKE MAGNET	CONTROL RELAY	INVERTER	SILICON RECTIFIER	
		IM 30,31	DB30,31	MCCB300	TR 300	M301	CR301,302,303	INV300	RF300	
	AC 3PH 220V 60Hz	1.0KW x 6P	DC 100V	ABE-33AF/15AT	–	DMC22b	MINI 4a4b	SV022iG5A-2	SR-30	
	AC 3PH 380(440,460,480)V 60Hz	1.0KW x 6P	DC 100V	ABE-33AF/15AT	380(440,460,480)/220V,500VA	DMC22b	MINI 4a4b	SV022iG5A-4	SR-30	
SELECTION / MAKER	KUK DONG HOIST			LS				LS	ASECO	

MK	DATE	REVISIONS	CHK.	APP.
4				
3				
2				
1				

CUSTOMER	INVERTER CONTROL	DRAWING	DESIGN	CHECKED	APPROVED	SCALE	DATE	ORDER NO.
DRAWING TITLE	TRAVERSING POWER & CONTROL CIRCUIT DIAGRAM							
		극동호이스트 주식회사 KUK DONG HOIST CO., LTD.				DWG. NO	KD15EI003	

192.168.11.51 / 2019-05-21 13:51:47

불법복제 및 배포금지

1	2	3	4	5	6	7	8	9	10	11	12	13	14	15	16	17	18	19	20
TRAVERSING MOTION																			ADR'S NO.
POWER CIRCUIT DIAGRAM									CONTROL CIRCUIT DIAGRAM										
												BRAKE		EAST		WEST		HIGH SPEED	

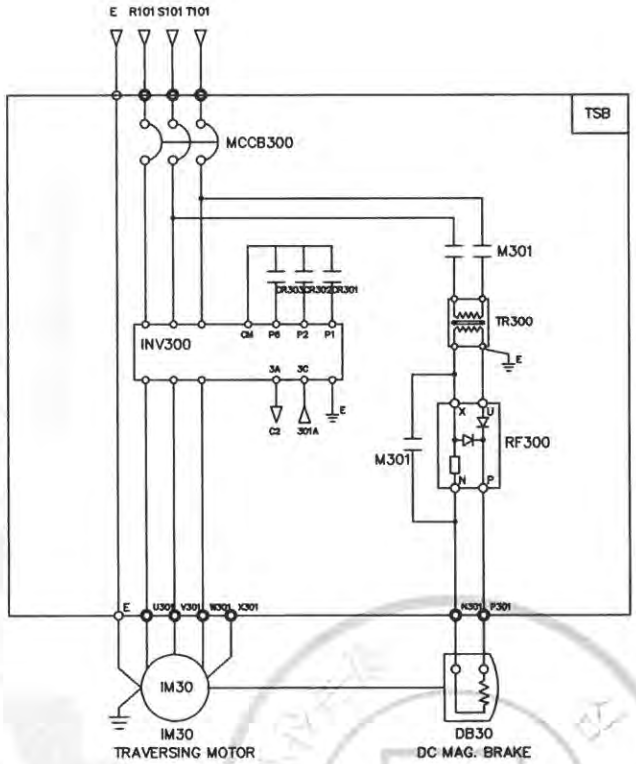

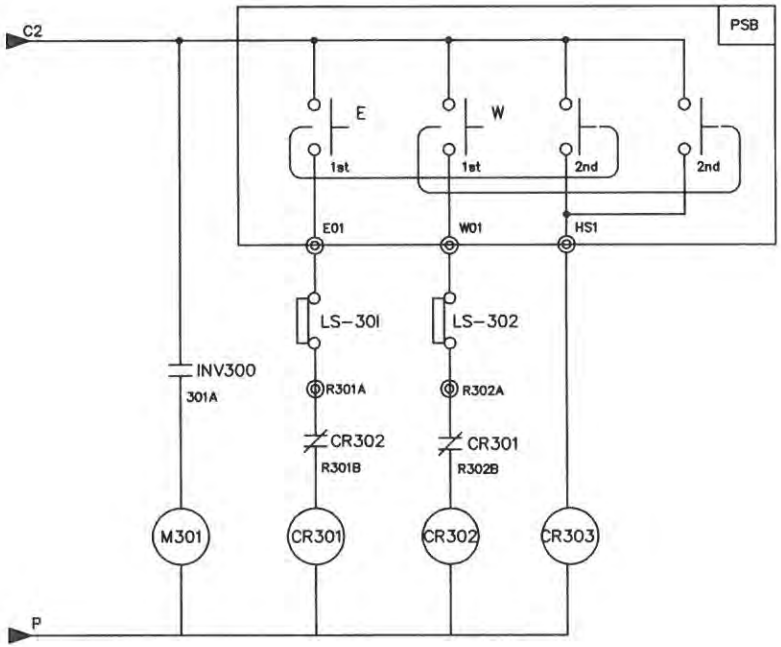

SPECIFICATION / SYMBOLS / DESCRIPTION	TRAVERSING POWER	TRAVERSING MOTOR	DC.MAG' BRAKE	NO FUSE BREAKER	TRANSFORMER	BRAKE MAGNET	CONTROL RELAY	INVERTER	SILICON RECTIFIER	
		IM 30	DB30	MCCB300	TR 300	M301	CR301,302,303	INV300	RF300	
	AC 3PH 220V 60Hz	1.5KW x 4P	DC 100V	ABE-33AF/10AT	-	DMC22b	MINI 4a4b	SV015iG5A-2	SR-30	
	AC 3PH 380(440,460,480)V 60Hz	1.5KW x 4P	DC 100V	ABE-33AF/10AT	380(440,460,480)/220V,300VA	DMC22b	MINI 4a4b	SV015iG5A-4	SR-30	
SELECTION MAKER	KUK DONG HOIST			LS				LS	ASECO	

MK	DATE	REVISIONS	CHK.	APP.
4				
3				
2				
1				

CUSTOMER	INVERTER CONTROL
DRAWING TITLE	TRAVERSING POWER & CONTROL CIRCUIT DIAGRAM

DRAWING	DESIGN	CHECKED	APPROVED	SCALE	DATE	ORDER NO.

KD 극동호이스트 주식회사 KUK DONG HOIST CO., LTD.

DWG. NO KD15EI004

불법복제 및 배포금지

192.168.11.51 / 2019-05-21 13:51:47

1	2	3	4	5	6	7	8	9	10	11	12	13	14	15	16	17	18	19	20
TRAVERSING MOTION																			ADR'S NO.
POWER CIRCUIT DIAGRAM										CONTROL CIRCUIT DIAGRAM									
												BRAKE		EAST		WEST		HIGH SPEED	

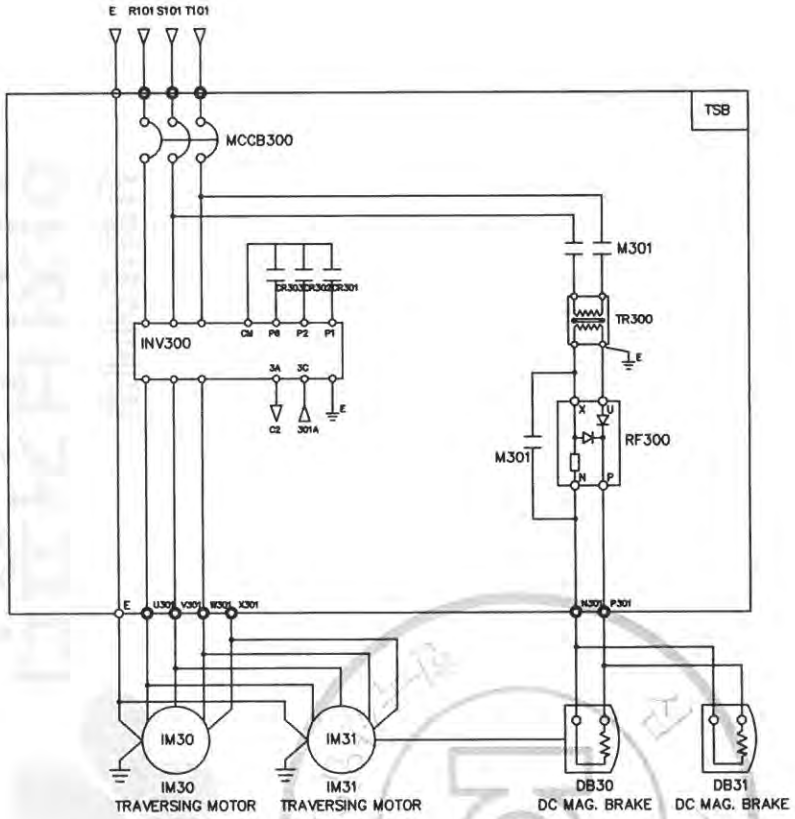

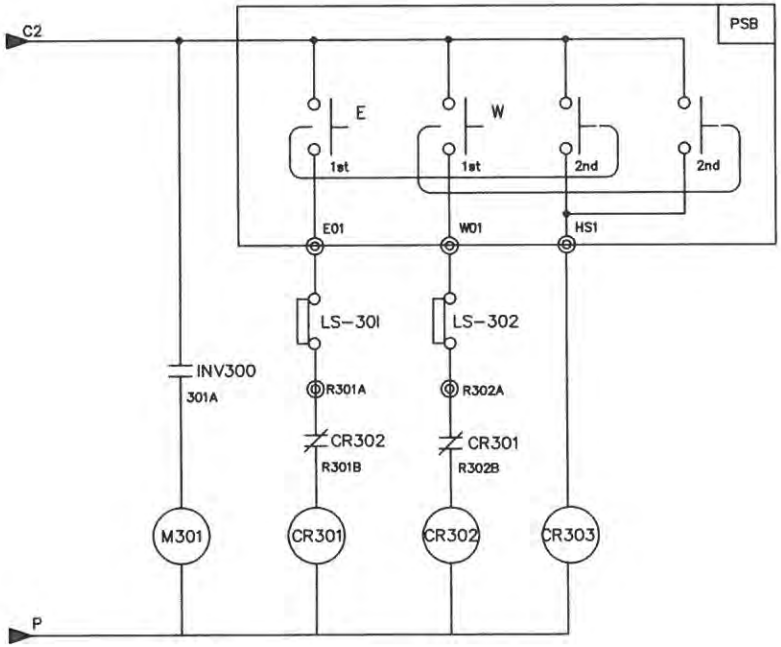

SPECIFICATION / SYMBOLS / DESCRIPTION	TRAVERSING POWER	TRAVERSING MOTOR	DC.MAG' BRAKE	NO FUSE BREAKER	TRANSFORMER	BRAKE MAGNET	CONTROL RELAY	INVERTER	SILICON RECTIFIER
		IM 30,31	DB30,31	MCCB300	TR 300	M301	CR301,302,303	INV300	RF300
	AC 3PH 220V 60Hz	1.5KW x 4P	DC 100V	ABE-33AF/20AT	-	DMC22b	MINI 4a4b	SV037iG5A-2	SR-30
	AC 3PH 380(440,460,480)V 60Hz	1.5KW x 4P	DC 100V	ABE-33AF/15AT	380(440,460,480)/220V,500VA	DMC22b	MINI 4a4b	SV037iG5A-4	SR-30
SELECTION / MAKER	KUK DONG HOIST			LS				LS	ASECO

MK	DATE	REVISIONS	CHK.	APP.
4				
3				
2				
1				

CUSTOMER	INVERTER CONTROL
DRAWING TITLE	TRAVERSING POWER & CONTROL CIRCUIT DIAGRAM

DRAWING	DESIGN	CHECKED	APPROVED	SCALE	DATE	ORDER NO.

KD 극동호이스트 주식회사 KUK DONG HOIST CO., LTD.

DWG. NO KD15EI005

불법복제 및 배포금지

192.168.11.51 / 2019-05-21 13:51:47

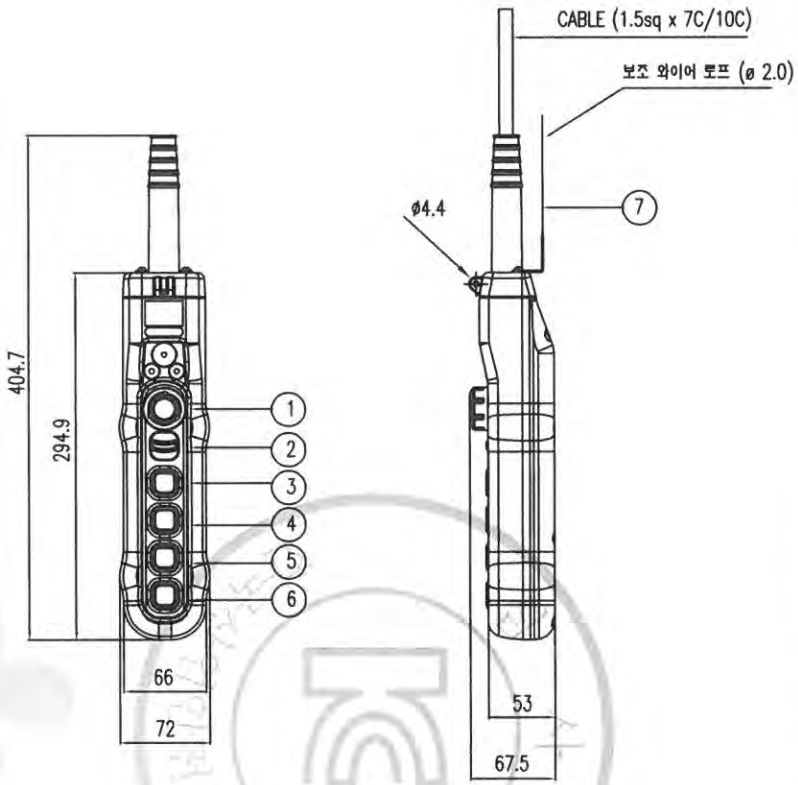

구분 / 색상	조작버튼	표시등
적색	비상	비상
황색	비정상	비정상
녹색	정상	정상
청색	의무	의무
흰색,회색-흑색	지정된의미없음	기타

* MATERIAL : POLYCARBOBATE(PLASTIC)
* BODY COLOR : YELLOW, BLACK
* IP : 55 이상

NO	SYMBOL	TYPE	SPEC.	COLOR
1	E.B.S	PUSH LOCK TURN RESET TYPE	250VAC x 6A	RED
2	SPARE			BLACK
3	상	1PUSH BUTTON 1STEP (2STEP)		
4	하	1PUSH BUTTON 1STEP (2STEP)		
5	동(전)	1PUSH BUTTON 1STEP (2STEP)		
6	서(후)	1PUSH BUTTON 1STEP (2STEP)		
7	보조 와이어	ø 2.0		

REV	DATE	DESCRIPTION	DRAWN	CHECK	APPRVD
A	05.AUG.2016	REDRAWING	K.H.Han	-	-

TITLE
PENDANT PUSH BUTTON SWITCH
LAY OUT

CUSTOMER

극동호이스트 주식회사
KUKDONG HOIST CO., LTD.

DESIGN	SCALE	SHT. NO.	ORDER NO.

DWG. NO.

192.168.11.51 / 2019-05-21 13:51:47
불법복제 및 배포금지

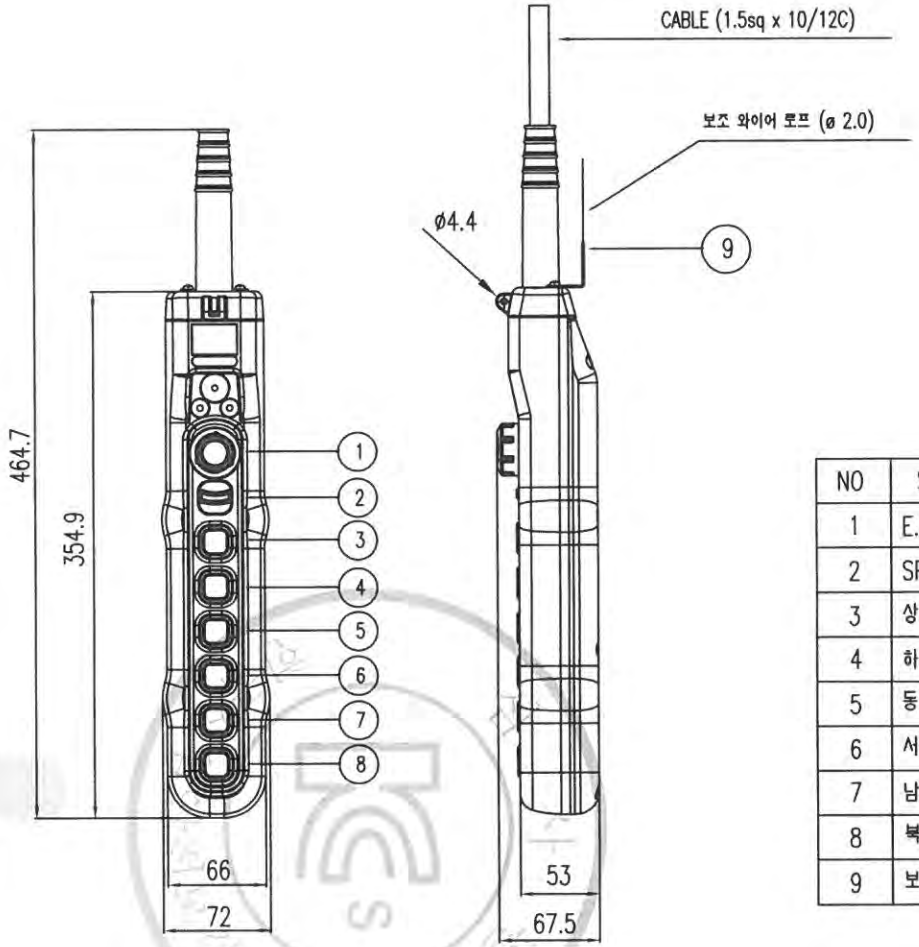

구분 / 색상	조작버튼	표시등
적색	비상	비상
황색	비정상	비정상
녹색	정상	정상
청색	의무	의무
흰색,회색-흑색	지정된의미없음	기타

* MATERIAL : POLYCARBOBATE(PLASTIC)
* BODY COLOR : YELLOW, BLACK
* IP : 55 이상

NO	SYMBOL	TYPE	SPEC.	COLOR
1	E.B.S	PUSH LOCK TURN RESET TYPE	250VAC x 6A	RED
2	SPARE			BLACK
3	상	1PUSH BUTTON 1STEP (2STEP)		
4	하	1PUSH BUTTON 1STEP (2STEP)		
5	동 (좌)	1PUSH BUTTON 1STEP (2STEP)		
6	서 (우)	1PUSH BUTTON 1STEP (2STEP)		
7	남 (전)	1PUSH BUTTON 1STEP		
8	북 (후)	1PUSH BUTTON 1STEP		
9	보조 WIRE	ø 2.0		

REV	DATE	DESCRIPTION	DRAWN	CHECK	APPRVD
	05.AUG.2016	REDRAWING	K.H.Han	-	-

TITLE
PENDANT PUSH BUTTON SWITCH
LAY OUT

CUSTOMER

극동호이스트 주식회사
KUKDONG HOIST CO., LTD.

DESIGN	SCALE	SHT. NO.	ORDER NO.

DWG. NO.

192.168.11.51 / 2019-05-21 13:51:47

불법복제 및 배포금지

LOAD LIMITER 권고 SETTING치

* POWER SOURCE : AC 3¢ 220V 60Hz

극동호이스트(주)

HOIST	MOTOR 용량	LOAD LIMITER 권고 SETTING치			LOAD CURRENT		C.T MODEL	연결단자 NO	C.T 용량	REMARK
		LOAD CURRENT	ADJ START TIME	SHOCK TIME	100%	110%				
10 TON	9.0KW x 8P	110%	1 SEC	1 SEC	45.0 A	49.5 A	CT-2	K-K1, L-L1	5 V.A	
	13KW x 6P	110%	1 SEC	1 SEC	53.0 A	58.3 A	CT-2	K-K1, L-L1	5 V.A	
15 TON	8.5KW x 12P	110%	1 SEC	1 SEC	58.6 A	64.4 A	CT-2	K-K1, L-L1	5 V.A	
	13KW x 8P	110%	1 SEC	1 SEC	59.0 A	64.9 A	CT-2	K-K1, L-L1	5 V.A	
20 TON	11.5KW x 12P	110%	1 SEC	1 SEC	70.8 A	77.9 A	CT-2	K-K1, L-L1	5 V.A	
	17KW x 8P	110%	1 SEC	1 SEC	76.6 A	84.3 A	CT-2	K-K1, L-L1	5 V.A	
	23KW x 6P	110%	1 SEC	1 SEC	93.2 A	100.4 A	CT-2	K-K1, L-L1	5 V.A	
30 TON	11.5KW x 12P	110%	1 SEC	1 SEC	70.8 A	77.9 A	CT-2	K-K1, L-L1	5 V.A	
	17KW x 8P	110%	1 SEC	1 SEC	76.6 A	84.3 A	CT-2	K-K1, L-L1	5 V.A	
	23KW x 6P	110%	1 SEC	1 SEC	93.2 A	100.4 A	CT-2	K-K1, L-L1	5 V.A	
35 TON	33KW x 6P	110%	1 SEC	1 SEC	126.6 A	134.2 A	CT-2	K-K1, L-L1	5 V.A	
40 TON	33KW x 6P	110%	1 SEC	1 SEC	126.6 A	134.2 A	CT-2	K-K1, L-L1	5 V.A	
50 TON	33KW x 6P	110%	1 SEC	1 SEC	126.6 A	134.2 A	CT-2	K-K1, L-L1	5 V.A	
60 TON	33KW x 6P	110%	1 SEC	1 SEC	126.6 A	134.2 A	CT-2	K-K1, L-L1	5 V.A	
70 TON	33KW x 6P	110%	1 SEC	1 SEC	126.6 A	134.2 A	CT-2	K-K1, L-L1	5 V.A	

NOTE

1. 상기 TABLE의 수치는 권고 SETTING 수치이며 MOTOR의 특성 및 현장 조건에 따라 변경 가능함.

192.168.11.51 / 2019-05-21 13:51:47

불법복제 및 배포금지

LOAD LIMITER 권고 SETTING치

* POWER SOURCE : AC 3¢ 380V 60Hz

극동호이스트(주)

HOIST	MOTOR 용량	LOAD LIMITER 권고 SETTING치			LOAD CURRENT		C.T MODEL	연결단자 NO	C.T 용량	REMARK
		LOAD CURRENT	ADJ START TIME	SHOCK TIME	100%	110%				
10 TON	9.0KW x 8P	110%	1 SEC	1 SEC	26.0 A	28.6 A	CT-2	K-K1, L-L1	5 V.A	
	13KW x 6P	110%	1 SEC	1 SEC	30.7 A	33.8 A	CT-2	K-K1, L-L1	5 V.A	
15 TON	8.5KW x 12P	110%	1 SEC	1 SEC	33.9 A	38.3 A	CT-2	K-K1, L-L1	5 V.A	
	13KW x 8P	110%	1 SEC	1 SEC	34.2 A	38.8 A	CT-2	K-K1, L-L1	5 V.A	
20 TON	11.5KW x 12P	110%	1 SEC	1 SEC	41.0 A	46.8 A	CT-2	K-K1, L-L1	5 V.A	
	17KW x 8P	110%	1 SEC	1 SEC	44.3 A	50.1 A	CT-2	K-K1, L-L1	5 V.A	
	23KW x 6P	110%	1 SEC	1 SEC	54.0 A	60.2 A	CT-2	K-K1, L-L1	5 V.A	
30 TON	11.5KW x 12P	110%	1 SEC	1 SEC	41.0 A	46.8 A	CT-2	K-K1, L-L1	5 V.A	
	17KW x 8P	110%	1 SEC	1 SEC	44.3 A	50.1 A	CT-2	K-K1, L-L1	5 V.A	
	23KW x 6P	110%	1 SEC	1 SEC	54.0 A	60.2 A	CT-2	K-K1, L-L1	5 V.A	
35 TON	33KW x 6P	110%	1 SEC	1 SEC	77.3 A	82.8 A	CT-2	K-K1, L-L1	5 V.A	
40 TON	33KW x 6P	110%	1 SEC	1 SEC	77.3 A	82.8 A	CT-2	K-K1, L-L1	5 V.A	
50 TON	33KW x 6P	110%	1 SEC	1 SEC	77.3 A	82.8 A	CT-2	K-K1, L-L1	5 V.A	
60 TON	33KW x 6P	110%	1 SEC	1 SEC	77.3 A	82.8 A	CT-2	K-K1, L-L1	5 V.A	
70 TON	33KW x 6P	110%	1 SEC	1 SEC	77.3 A	82.8 A	CT-2	K-K1, L-L1	5 V.A	

NOTE

1. 상기 TABLE의 수치는 권고 SETTING 수치이며 MOTOR의 특성 및 현장 조건에 따라 변경 가능함.

192.168.11.51 / 2019-05-21 13:51:47

불법복제 및 배포금지

LOAD LIMITER 권고 SETTING치

* POWER SOURCE : AC 3¢ 440V 60Hz

극동호이스트(주)

HOIST	MOTOR 용량	LOAD LIMITER 권고 SETTING치			LOAD CURRENT		C.T MODEL	연결단자 NO	C.T 용량	REMARK
		LOAD CURRENT	ADJ START TIME	SHOCK TIME	100%	110%				
10 TON	9.0KW x 8P	110%	1 SEC	1 SEC	22.5 A	24.8 A	CT-2	K-K1, L-L1	5 V.A	
	13KW x 6P	110%	1 SEC	1 SEC	26.5 A	29.2 A	CT-2	K-K1, L-L1	5 V.A	
15 TON	8.5KW x 12P	110%	1 SEC	1 SEC	29.3 A	33.4 A	CT-2	K-K1, L-L1	5 V.A	
	13KW x 8P	110%	1 SEC	1 SEC	29.5 A	33.6 A	CT-2	K-K1, L-L1	5 V.A	
20 TON	11.5KW x 12P	110%	1 SEC	1 SEC	35.4 A	39.7 A	CT-2	K-K1, L-L1	5 V.A	
	17KW x 8P	110%	1 SEC	1 SEC	38.3 A	42.1 A	CT-2	K-K1, L-L1	5 V.A	
	23KW x 6P	110%	1 SEC	1 SEC	46.6 A	50.3 A	CT-2	K-K1, L-L1	5 V.A	
30 TON	11.5KW x 12P	110%	1 SEC	1 SEC	35.4 A	39.7 A	CT-2	K-K1, L-L1	5 V.A	
	17KW x 8P	110%	1 SEC	1 SEC	38.3 A	42.1 A	CT-2	K-K1, L-L1	5 V.A	
	23KW x 6P	110%	1 SEC	1 SEC	46.6 A	50.3 A	CT-2	K-K1, L-L1	5 V.A	
35 TON	33KW x 6P	110%	1 SEC	1 SEC	63.6 A	68.6 A	CT-2	K-K1, L-L1	5 V.A	
40 TON	33KW x 6P	110%	1 SEC	1 SEC	63.6 A	68.6 A	CT-2	K-K1, L-L1	5 V.A	
50 TON	33KW x 6P	110%	1 SEC	1 SEC	63.6 A	68.6 A	CT-2	K-K1, L-L1	5 V.A	
60 TON	33KW x 6P	110%	1 SEC	1 SEC	63.6 A	68.6 A	CT-2	K-K1, L-L1	5 V.A	
70 TON	33KW x 6P	110%	1 SEC	1 SEC	63.6 A	68.6 A	CT-2	K-K1, L-L1	5 V.A	

NOTE

1. 상기 TABLE의 수치는 권고 SETTING 수치이며 MOTOR의 특성 및 현장 조건에 따라 변경 가능함.

불법복제 및 배포금지

192.168.11.51 / 2019-05-21 13:51:47

LOAD LIMITER 권고 SETTING치

* POWER SOURCE : AC 3Φ 460V 60Hz

극동호이스트(주)

HOIST	MOTOR 용량	LOAD LIMITER 권고 SETTING치			LOAD CURRENT		C.T MODEL	연결단자 NO	C.T 용량	REMARK
		LOAD CURRENT	ADJ START TIME	SHOCK TIME	100%	110%				
10 TON	9.0KW x 8P	110%	1 SEC	1 SEC	21.5 A	23.7 A	CT-2	K-K1, L-L1	5 V.A	
	13KW x 6P	110%	1 SEC	1 SEC	25.4 A	28.0 A	CT-2	K-K1, L-L1	5 V.A	
15 TON	8.5KW x 12P	110%	1 SEC	1 SEC	28.1 A	32.0 A	CT-2	K-K1, L-L1	5 V.A	
	13KW x 8P	110%	1 SEC	1 SEC	28.4 A	32.1 A	CT-2	K-K1, L-L1	5 V.A	
20 TON	11.5KW x 12P	110%	1 SEC	1 SEC	33.9 A	37.7 A	CT-2	K-K1, L-L1	5 V.A	
	17KW x 8P	110%	1 SEC	1 SEC	36.7 A	40.5 A	CT-2	K-K1, L-L1	5 V.A	
	23KW x 6P	110%	1 SEC	1 SEC	44.5 A	48.3 A	CT-2	K-K1, L-L1	5 V.A	
30 TON	11.5KW x 12P	110%	1 SEC	1 SEC	33.9 A	37.7 A	CT-2	K-K1, L-L1	5 V.A	
	17KW x 8P	110%	1 SEC	1 SEC	36.7 A	40.5 A	CT-2	K-K1, L-L1	5 V.A	
	23KW x 6P	110%	1 SEC	1 SEC	44.5 A	48.3 A	CT-2	K-K1, L-L1	5 V.A	
35 TON	33KW x 6P	110%	1 SEC	1 SEC	60.5 A	65.5 A	CT-2	K-K1, L-L1	5 V.A	
40 TON	33KW x 6P	110%	1 SEC	1 SEC	60.5 A	65.5 A	CT-2	K-K1, L-L1	5 V.A	
50 TON	33KW x 6P	110%	1 SEC	1 SEC	60.5 A	65.5 A	CT-2	K-K1, L-L1	5 V.A	
60 TON	33KW x 6P	110%	1 SEC	1 SEC	60.5 A	65.5 A	CT-2	K-K1, L-L1	5 V.A	
70 TON	33KW x 6P	110%	1 SEC	1 SEC	60.5 A	65.5 A	CT-2	K-K1, L-L1	5 V.A	

NOTE

1. 상기 TABLE의 수치는 권고 SETTING 수치이며 MOTOR의 특성 및 현장 조건에 따라 변경 가능함.

192.168.11.51 / 2019-05-21 13:51:47

불법복제 및 배포금지

LOAD LIMITER 권고 SETTING치

* POWER SOURCE : AC 3¢ 480V 60Hz

극동호이스트(주)

HOIST	MOTOR 용량	LOAD LIMITER 권고 SETTING치			LOAD CURRENT		C.T MODEL	연결단자 NO	C.T 용량	REMARK
		LOAD CURRENT	ADJ START TIME	SHOCK TIME	100%	110%				
10 TON	9.0KW x 8P	110%	1 SEC	1 SEC	20.6 A	22.7 A	CT-2	K-K1, L-L1	5 V.A	
	13KW x 6P	110%	1 SEC	1 SEC	25.4 A	28.0 A	CT-2	K-K1, L-L1	5 V.A	
15 TON	8.5KW x 12P	110%	1 SEC	1 SEC	26.9 A	31.1 A	CT-2	K-K1, L-L1	5 V.A	
	13KW x 8P	110%	1 SEC	1 SEC	27.2 A	31.4 A	CT-2	K-K1, L-L1	5 V.A	
20 TON	11.5KW x 12P	110%	1 SEC	1 SEC	32.5 A	36.9 A	CT-2	K-K1, L-L1	5 V.A	
	17KW x 8P	110%	1 SEC	1 SEC	35.2 A	39.6 A	CT-2	K-K1, L-L1	5 V.A	
	23KW x 6P	110%	1 SEC	1 SEC	42.6 A	46.9 A	CT-2	K-K1, L-L1	5 V.A	
30 TON	11.5KW x 12P	110%	1 SEC	1 SEC	32.5 A	36.9 A	CT-2	K-K1, L-L1	5 V.A	
	17KW x 8P	110%	1 SEC	1 SEC	35.2 A	39.6 A	CT-2	K-K1, L-L1	5 V.A	
	23KW x 6P	110%	1 SEC	1 SEC	42.6 A	46.9 A	CT-2	K-K1, L-L1	5 V.A	
35 TON	33KW x 6P	110%	1 SEC	1 SEC	58.0 A	62.8 A	CT-2	K-K1, L-L1	5 V.A	
40 TON	33KW x 6P	110%	1 SEC	1 SEC	58.0 A	62.8 A	CT-2	K-K1, L-L1	5 V.A	
50 TON	33KW x 6P	110%	1 SEC	1 SEC	58.0 A	62.8 A	CT-2	K-K1, L-L1	5 V.A	
60 TON	33KW x 6P	110%	1 SEC	1 SEC	58.0 A	62.8 A	CT-2	K-K1, L-L1	5 V.A	
70 TON	33KW x 6P	110%	1 SEC	1 SEC	58.0 A	62.8 A	CT-2	K-K1, L-L1	5 V.A	

NOTE

1. 상기 TABLE의 수치는 권고 SETTING 수치이며 MOTOR의 특성 및 현장 조건에 따라 변경 가능함.

192.168.11.51 / 2019-05-21 13:51:47

불법복제 및 배포금지

E.O.C.R 권고 SETTING치

* POWER SOURCE : AC 3¢ 220V 60Hz

극동호이스트(주)

HOIST	MOTOR 용량	MOTOR 정격 전류	DRIVE TYPE	E.O.C.R TYPE	권고 SETTING 치			REMARK
					DELAY TIME	ERATION TI	CURRENT	
10 TON	9.0KW x 8P	45.0 A	1 DRAVE	SS-60	3 SEC	1 SEC	45.0 A	
	13KW x 6P	53.0 A	1 DRAVE	SS-60	3 SEC	1 SEC	53.0 A	
15 TON	8.5KW x 12P	58.6 A	1 DRAVE	SS-100	3 SEC	1 SEC	58.6 A	
	13KW x 8P	59.0 A	1 DRAVE	SS-100	3 SEC	1 SEC	59.0 A	
20 TON	11.5KW x 12P	70.8 A	1 DRAVE	SS-100	3 SEC	1 SEC	70.8 A	
	17KW x 8P	76.6 A	1 DRAVE	SS-100	3 SEC	1 SEC	76.6 A	
	23KW x 6P	93.2 A	1 DRAVE	SS-100	3 SEC	1 SEC	93.2 A	
30 TON	11.5KW x 12P	70.8 A	1 DRAVE	SS-100	3 SEC	1 SEC	70.8 A	
	17KW x 8P	76.6 A	1 DRAVE	SS-100	3 SEC	1 SEC	76.6 A	
	23KW x 6P	93.2 A	1 DRAVE	SS-100	3 SEC	1 SEC	93.2 A	
35 TON	33KW x 6P	126.6 A	1 DRAVE	SS-130	3 SEC	1 SEC	126.6 A	
40 TON	33KW x 6P	126.6 A	1 DRAVE	SS-130	3 SEC	1 SEC	126.6 A	
50 TON	33KW x 6P	126.6 A	1 DRAVE	SS-130	3 SEC	1 SEC	126.6 A	
60 TON	33KW x 6P	126.6 A	1 DRAVE	SS-130	3 SEC	1 SEC	126.6 A	
70 TON	33KW x 6P	126.6 A	1 DRAVE	SS-130	3 SEC	1 SEC	126.6 A	

NOTE

1. 상기 TABLE의 수치는 권고 SETTING 수치이며 MOTOR의 특성 및 현장 조건에 따라 변경 가능함.

192.168.11.51 / 2019-05-21 13:51:47

무단배포 및 재배포금지

E.O.C.R 권고 SETTING치

* POWER SOURCE : AC 3¢ 380V 60Hz

극동호이스트(주)

HOIST	MOTOR 용량	MOTOR 정격 전류	DRIVE TYPE	E.O.C.R TYPE	권고 SETTING 치			REMARK
					DELAY TIME	ERATION TI	CURRENT	
10 TON	9.0KW x 8P	26.0 A	1 DRAVE	SS-30	3 SEC	1 SEC	26.0 A	
	13KW x 6P	30.7 A	1 DRAVE	SS-60	3 SEC	1 SEC	30.7 A	
15 TON	8.5KW x 12P	33.9 A	1 DRAVE	SS-60	3 SEC	1 SEC	33.9 A	
	13KW x 8P	34.2 A	1 DRAVE	SS-60	3 SEC	1 SEC	34.2 A	
20 TON	11.5KW x 12P	41.0 A	1 DRAVE	SS-60	3 SEC	1 SEC	41.0 A	
	17KW x 8P	44.3 A	1 DRAVE	SS-60	3 SEC	1 SEC	44.3 A	
	23KW x 6P	54.0 A	1 DRAVE	SS-60	3 SEC	1 SEC	54.0 A	
30 TON	11.5KW x 12P	41.0 A	1 DRAVE	SS-60	3 SEC	1 SEC	41.0 A	
	17KW x 8P	43.3 A	1 DRAVE	SS-60	3 SEC	1 SEC	43.3 A	
	23KW x 6P	54.0 A	1 DRAVE	SS-60	3 SEC	1 SEC	54.0 A	
35 TON	33KW x 6P	77.3 A	1 DRAVE	SS-100	3 SEC	1 SEC	77.3 A	
40 TON	33KW x 6P	77.3 A	1 DRAVE	SS-100	3 SEC	1 SEC	77.3 A	
50 TON	33KW x 6P	77.3 A	1 DRAVE	SS-100	3 SEC	1 SEC	77.3 A	
60 TON	33KW x 6P	77.3 A	1 DRAVE	SS-100	3 SEC	1 SEC	77.3 A	
70 TON	33KW x 6P	77.3 A	1 DRAVE	SS-100	3 SEC	1 SEC	77.3 A	

NOTE

1. 상기 TABLE의 수치는 권고 SETTING 수치이며 MOTOR의 특성 및 현장 조건에 따라 변경 가능함.

192.168.11.51 / 2019-05-21 13:51:47

무단배포 및 복제 금지

E.O.C.R 권고 SETTING치

* POWER SOURCE : AC 3¢ 440V 60Hz

극동호이스트(주)

HOIST	MOTOR 용량	MOTOR 정격 전류	DRIVE TYPE	E.O.C.R TYPE	권고 SETTING 치			REMARK
					DELAY TIME	ERATION TI	CURRENT	
10 TON	9.0KW x 8P	22.5 A	1 DRAVE	SS-30	3 SEC	1 SEC	22.5 A	
	13KW x 6P	26.5 A	1 DRAVE	SS-30	3 SEC	1 SEC	26.5 A	
15 TON	8.5KW x 12P	29.3 A	1 DRAVE	SS-60	3 SEC	1 SEC	29.3 A	
	13KW x 8P	29.5 A	1 DRAVE	SS-60	3 SEC	1 SEC	29.5 A	
20 TON	11.5KW x 12P	35.4 A	1 DRAVE	SS-60	3 SEC	1 SEC	35.4 A	
	17KW x 8P	38.3 A	1 DRAVE	SS-60	3 SEC	1 SEC	38.3 A	
	23KW x 6P	44.6 A	1 DRAVE	SS-60	3 SEC	1 SEC	44.6 A	
30 TON	11.5KW x 12P	35.4 A	1 DRAVE	SS-60	3 SEC	1 SEC	35.4 A	
	17KW x 8P	38.3 A	1 DRAVE	SS-60	3 SEC	1 SEC	38.3 A	
	23KW x 6P	44.6 A	1 DRAVE	SS-60	3 SEC	1 SEC	44.6 A	
35 TON	33KW x 6P	63.3 A	1 DRAVE	SS-100	3 SEC	1 SEC	63.3 A	
40 TON	33KW x 6P	63.3 A	1 DRAVE	SS-100	3 SEC	1 SEC	63.3 A	
50 TON	33KW x 6P	63.3 A	1 DRAVE	SS-100	3 SEC	1 SEC	63.3 A	
60 TON	33KW x 6P	63.3 A	1 DRAVE	SS-100	3 SEC	1 SEC	63.3 A	
70 TON	33KW x 6P	63.3 A	1 DRAVE	SS-100	3 SEC	1 SEC	63.3 A	

NOTE

1. 상기 TABLE의 수치는 권고 SETTING 수치이며 MOTOR의 특성 및 현장 조건에 따라 변경 가능함.

192.168.11.51 / 2019-05-21 13:51:47

무단복제 및 배포금지

E.O.C.R 권고 SETTING치

* POWER SOURCE : AC 3¢ 460V 60Hz

극동호이스트(주)

HOIST	MOTOR 용량	MOTOR 정격 전류	DRIVE TYPE	E.O.C.R TYPE	권고 SETTING 치			REMARK
					DELAY TIME	ERATION TI	CURRENT	
10 TON	9.0KW x 8P	21.5 A	1 DRAVE	SS-30	3 SEC	1 SEC	21.5 A	
	13KW x 6P	25.4 A	1 DRAVE	SS-30	3 SEC	1 SEC	25.4 A	
15 TON	8.5KW x 12P	28.1 A	1 DRAVE	SS-60	3 SEC	1 SEC	28.1 A	
	13KW x 8P	28.4 A	1 DRAVE	SS-60	3 SEC	1 SEC	28.4 A	
20 TON	11.5KW x 12P	33.9 A	1 DRAVE	SS-60	3 SEC	1 SEC	33.9 A	
	17KW x 8P	36.7 A	1 DRAVE	SS-60	3 SEC	1 SEC	36.7 A	
	23KW x 6P	44.5 A	1 DRAVE	SS-60	3 SEC	1 SEC	44.5 A	
30 TON	11.5KW x 12P	33.9 A	1 DRAVE	SS-60	3 SEC	1 SEC	33.9 A	
	17KW x 8P	36.7 A	1 DRAVE	SS-60	3 SEC	1 SEC	36.7 A	
	23KW x 6P	44.5 A	1 DRAVE	SS-60	3 SEC	1 SEC	44.5 A	
35 TON	33KW x 6P	60.5 A	1 DRAVE	SS-100	3 SEC	1 SEC	60.5 A	
40 TON	33KW x 6P	60.5 A	1 DRAVE	SS-100	3 SEC	1 SEC	60.5 A	
50 TON	33KW x 6P	60.5 A	1 DRAVE	SS-100	3 SEC	1 SEC	60.5 A	
60 TON	33KW x 6P	60.5 A	1 DRAVE	SS-100	3 SEC	1 SEC	60.5 A	
70 TON	33KW x 6P	60.5 A	1 DRAVE	SS-100	3 SEC	1 SEC	60.5 A	

NOTE

1. 상기 TABLE의 수치는 권고 SETTING 수치이며 MOTOR의 특성 및 현장 조건에 따라 변경 가능함.

192.168.11.51 / 2019-05-21 13:51:47

무단배포 및 재배포금지

E.O.C.R 권고 SETTING치

* POWER SOURCE : AC 3¢ 480V 60Hz

극동호이스트(주)

HOIST	MOTOR 용량	MOTOR 정격 전류	DRIVE TYPE	E.O.C.R TYPE	권고 SETTING 치			REMARK
					DELAY TIME	ERATION TI	CURRENT	
10 TON	9.0KW x 8P	20.6 A	1 DRAVE	SS-30	3 SEC	1 SEC	20.6 A	
	13KW x 6P	25.4 A	1 DRAVE	SS-30	3 SEC	1 SEC	25.4 A	
15 TON	8.5KW x 12P	26.9 A	1 DRAVE	SS-60	3 SEC	1 SEC	26.9 A	
	13KW x 8P	27.2 A	1 DRAVE	SS-60	3 SEC	1 SEC	27.2 A	
20 TON	11.5KW x 12P	32.5 A	1 DRAVE	SS-60	3 SEC	1 SEC	32.5 A	
	17KW x 8P	35.2 A	1 DRAVE	SS-60	3 SEC	1 SEC	35.2 A	
	23KW x 6P	42.6 A	1 DRAVE	SS-60	3 SEC	1 SEC	42.6 A	
30 TON	11.5KW x 12P	32.5 A	1 DRAVE	SS-60	3 SEC	1 SEC	32.5 A	
	17KW x 8P	35.2 A	1 DRAVE	SS-60	3 SEC	1 SEC	35.2 A	
	23KW x 6P	42.6 A	1 DRAVE	SS-60	3 SEC	1 SEC	42.6 A	
35 TON	33KW x 6P	58.0 A	1 DRAVE	SS-60	3 SEC	1 SEC	58.0 A	
40 TON	33KW x 6P	58.0 A	1 DRAVE	SS-60	3 SEC	1 SEC	58.0 A	
50 TON	33KW x 6P	58.0 A	1 DRAVE	SS-60	3 SEC	1 SEC	58.0 A	
60 TON	33KW x 6P	58.0 A	1 DRAVE	SS-60	3 SEC	1 SEC	58.0 A	
70 TON	33KW x 6P	58.0 A	1 DRAVE	SS-60	3 SEC	1 SEC	58.0 A	

NOTE

1. 상기 TABLE의 수치는 권고 SETTING 수치이며 MOTOR의 특성 및 현장 조건에 따라 변경 가능함.

192.168.11.51 / 2019-05-21 13:51:47

무단배포 및 재생산 금지

E.O.C.R 권고 SETTING 치

* POWER SOURCE : AC3¢ 220V 60Hz

극동호이스트 (주)

MOTOR 용량	MOTOR 정격 전류	DRIVE TYPE	E.O.C.R TYPE	권고 SETTING 치			REMARK
				DELAY TIME	OPERATION TIME	CURRENT	
0.2KW x 6P	2.0 A	1 DRIVE	SS - 05	3 SEC	1 SEC	2.0 A	
		2DRIVE	SS - 05	3 SEC	1 SEC	4.0 A	
0.4KW x 4P	2.7 A	1 DRIVE	SS - 05	3 SEC	1 SEC	2.7 A	
		2DRIVE	SS - 30	3 SEC	1 SEC	5.4 A	
0.5KW x 6P	3.4 A	1 DRIVE	SS - 05	3 SEC	1 SEC	3.4 A	
		2DRIVE	SS - 30	3 SEC	1 SEC	6.8 A	
0.75KW x 4P	4.1 A	1 DRIVE	SS - 05	3 SEC	1 SEC	4.1 A	
		2DRIVE	SS - 30	3 SEC	1 SEC	8.2 A	
1.0KW x 6P	6.7 A	1 DRIVE	SS - 30	3 SEC	1 SEC	6.7 A	
		2DRIVE	SS - 30	3 SEC	1 SEC	13.4 A	
1.5KW x 4P	7.3 A	1 DRIVE	SS - 30	3 SEC	1 SEC	7.3 A	
		2DRIVE	SS - 30	3 SEC	1 SEC	14.6 A	
1.5KW x 6P	7.6 A	1 DRIVE	SS - 30	3 SEC	1 SEC	7.6 A	
		2DRIVE	SS - 30	3 SEC	1 SEC	15.2 A	
2.2KW x 4P	10 A	1 DRIVE	SS - 30	3 SEC	1 SEC	10 A	
		2 DRIVE	SS - 30	3 SEC	1 SEC	20 A	
0.8/0.4KW x 4/8P	4.8/4.25 A	1 DRIVE	SS - 05	3 SEC	1 SEC	4.8 A	
			SS - 05	3 SEC	1 SEC	4.25 A	
		2 DRIVE	SS - 30	3 SEC	1 SEC	9.6 A	
			SS - 30	3 SEC	1 SEC	8.5 A	
2.2KW x 6P	12 A	1 DRIVE	SS - 30	3 SEC	1 SEC	12 A	
		2DRIVE	SS - 30	3 SEC	1 SEC	24 A	
3.7KW x 4P	16 A	1 DRIVE	SS - 30	3 SEC	1 SEC	16 A	
		2DRIVE	SS - 60	3 SEC	1 SEC	32 A	

NOTE

1, 상기 TABLE의 수치는 권고 SETTING 수치이며 MOTOR의 특성 및 현장 조건에 따라 변경 가능함.

192.168.11.51 / 2019-05-21 13:51:47

불법복제 및 배포금지

E.O.C.R 권고 SETTING 치

* POWER SOURCE : AC3¢ 380V 60Hz

극동호이스트 (주)

MOTOR 용량	MOTOR 정격 전류	DRIVE TYPE	E.O.C.R TYPE	권고 SETTING 치			REMARK
				DELAY TIME	OPERATION TIME	CURRENT	
0.2KW x 6P	1.2 A	1 DRIVE	SS - 05	3 SEC	1 SEC	1.2 A	
		2DRIVE	SS - 05	3 SEC	1 SEC	2.4 A	
0.4KW x 4P	1.6 A	1 DRIVE	SS - 05	3 SEC	1 SEC	1.6 A	
		2DRIVE	SS - 05	3 SEC	1 SEC	2	
0.5KW x 6P	2.0 A	1 DRIVE	SS - 05	3 SEC	1 SEC	2.0 A	
		2DRIVE	SS - 05	3 SEC	1 SEC	4.0 A	
0.75KW x 4P	2.4 A	1 DRIVE	SS - 05	3 SEC	1 SEC	2.4 A	
		2DRIVE	SS - 05	3 SEC	1 SEC	4.8 A	
1.0KW x 6P	3.9 A	1 DRIVE	SS - 05	3 SEC	1 SEC	3.9 A	
		2DRIVE	SS - 30	3 SEC	1 SEC	7.8 A	
1.5KW x 4P	4.2 A	1 DRIVE	SS - 05	3 SEC	1 SEC	4.2 A	
		2DRIVE	SS - 30	3 SEC	1 SEC	8.4 A	
1.5KW x 6P	4.4 A	1 DRIVE	SS - 05	3 SEC	1 SEC	4.4 A	
		2DRIVE	SS - 30	3 SEC	1 SEC	8.8 A	
2.2KW x 4P	5.8 A	1 DRIVE	SS - 30	3 SEC	1 SEC	5.8 A	
		2 DRIVE	SS - 30	3 SEC	1 SEC	11.6 A	
0.8/0.4KW x 4/8P	2.78/2.63 A	1 DRIVE	SS - 05	3 SEC	1 SEC	2.78 A	
			SS - 05	3 SEC	1 SEC	2.63A	
		2 DRIVE	SS - 30	3 SEC	1 SEC	5.48 A	
			SS - 30	3 SEC	1 SEC	5.26 A	
2.2KW x 6P	7.0 A	1 DRIVE	SS - 30	3 SEC	1 SEC	7.0 A	
		2DRIVE	SS - 30	3 SEC	1 SEC	14 A	
3.7KW x 4P	9.3 A	1 DRIVE	SS - 30	3 SEC	1 SEC	9.3 A	
		2DRIVE	SS - 30	3 SEC	1 SEC	18.6 A	

NOTE

1, 상기 TABLE의 수치는 권고 SETTING 수치이며 MOTOR의 특성 및 현장 조건에 따라 변경 가능함.

192.168.11.51 / 2019-05-21 13:51:47

불법복제 및 배포금지

E.O.C.R 권고 SETTING 치

* POWER SOURCE : AC3¢ 440V 60Hz

극동호이스트 (주)

MOTOR 용량	MOTOR 정격 전류	DRIVE TYPE	E.O.C.R TYPE	권고 SETTING 치			REMARK
				DELAY TIME	OPERATION TIME	CURRENT	
0.2KW x 6P	1.0 A	1 DRIVE	SS - 05	3 SEC	1 SEC	1.0 A	
		2DRIVE	SS - 05	3 SEC	1 SEC	2.0 A	
0.4KW x 4P	1.4 A	1 DRIVE	SS - 05	3 SEC	1 SEC	1.4 A	
		2DRIVE	SS - 05	3 SEC	1 SEC	2.8 A	
0.5KW x 6P	1.7 A	1 DRIVE	SS - 05	3 SEC	1 SEC	1.7 A	
		2DRIVE	SS - 05	3 SEC	1 SEC	3.4 A	
0.75KW x 4P	2.0 A	1 DRIVE	SS - 05	3 SEC	1 SEC	2.0 A	
		2DRIVE	SS - 05	3 SEC	1 SEC	4.0 A	
1.0KW x 6P	3.3 A	1 DRIVE	SS - 05	3 SEC	1 SEC	3.3 A	
		2DRIVE	SS - 30	3 SEC	1 SEC	6.6 A	
1.5KW x 4P	3.7 A	1 DRIVE	SS - 05	3 SEC	1 SEC	3.7 A	
		2DRIVE	SS - 30	3 SEC	1 SEC	7.4 A	
1.5KW x 6P	3.8 A	1 DRIVE	SS - 05	3 SEC	1 SEC	3.8 A	
		2DRIVE	SS - 30	3 SEC	1 SEC	7.6 A	
2.2KW x 4P	5.0 A	1 DRIVE	SS - 30	3 SEC	1 SEC	5.0 A	
		2 DRIVE	SS - 30	3 SEC	1 SEC	10 A	
0.8/0.4KW x 4/8P	2.4/2.27 A	1 DRIVE	SS - 05	3 SEC	1 SEC	2.4 A	
			SS - 05	3 SEC	1 SEC	2.27 A	
		2 DRIVE	SS - 05	3 SEC	1 SEC	4.8 A	
			SS - 05	3 SEC	1 SEC	4.54 A	
2.2KW x 6P	6.0 A	1 DRIVE	SS - 30	3 SEC	1 SEC	6.0 A	
		2DRIVE	SS - 30	3 SEC	1 SEC	12.0 A	
3.7KW x 4P	8.0 A	1 DRIVE	SS - 30	3 SEC	1 SEC	8.0 A	
		2DRIVE	SS - 30	3 SEC	1 SEC	16 A	

NOTE

1, 상기 TABLE의 수치는 권고 SETTING 수치이며 MOTOR의 특성 및 현장 조건에 따라 변경 가능함.

불법복제 및 배포금지

192.168.11.51 / 2019-05-21 13:51:47

E.O.C.R 권고 SETTING 치

* POWER SOURCE : AC3¢ 460V 60Hz

극동호이스트 (주)

MOTOR 용량	MOTOR 정격 전류	DRIVE TYPE	E.O.C.R TYPE	권고 SETTING 치			REMARK
				DELAY TIME	OPERATION TIME	CURRENT	
0.2KW x 6P	1.0 A	1 DRIVE	SS - 05	3 SEC	1 SEC	1.0 A	
		2DRIVE	SS - 05	3 SEC	1 SEC	2.0 A	
0.4KW x 4P	1.3 A	1 DRIVE	SS - 05	3 SEC	1 SEC	1.3 A	
		2DRIVE	SS - 05	3 SEC	1 SEC	2.6 A	
0.5KW x 6P	1.7 A	1 DRIVE	SS - 05	3 SEC	1 SEC	1.7 A	
		2DRIVE	SS - 05	3 SEC	1 SEC	3.4 A	
0.75KW x 4P	2.0 A	1 DRIVE	SS - 05	3 SEC	1 SEC	2.0 A	
		2DRIVE	SS - 05	3 SEC	1 SEC	4.0 A	
1.0KW x 6P	3.2 A	1 DRIVE	SS - 05	3 SEC	1 SEC	3.2 A	
		2DRIVE	SS - 30	3 SEC	1 SEC	6.4 A	
1.5KW x 4P	3.5 A	1 DRIVE	SS - 05	3 SEC	1 SEC	3.5 A	
		2DRIVE	SS - 30	3 SEC	1 SEC	7.0 A	
1.5KW x 6P	3.6 A	1 DRIVE	SS - 05	3 SEC	1 SEC	3.6 A	
		2DRIVE	SS - 30	3 SEC	1 SEC	7.2 A	
2.2KW x 4P	4.8 A	1 DRIVE	SS - 05	3 SEC	1 SEC	4.8 A	
		2 DRIVE	SS - 30	3 SEC	1 SEC	9.6 A	
0.8/0.4KW x 4/8P	2.3/2.15 A	1 DRIVE	SS - 05	3 SEC	1 SEC	2.3 A	
			SS - 05	3 SEC	1 SEC	2.15 A	
		2 DRIVE	SS - 05	3 SEC	1 SEC	4.6 A	
			SS - 05	3 SEC	1 SEC	4.3 A	
2.2KW x 6P	4.8 A	1 DRIVE	SS - 05	3 SEC	1 SEC	4.8 A	
		2DRIVE	SS - 30	3 SEC	1 SEC	9.6 A	
3.7KW x 4P	7.7 A	1 DRIVE	SS - 30	3 SEC	1 SEC	7.7 A	
		2DRIVE	SS - 30	3 SEC	1 SEC	15.4 A	

NOTE

1, 상기 TABLE의 수치는 권고 SETTING 수치이며 MOTOR의 특성 및 현장 조건에 따라 변경 가능함.

불법복제 및 배포금지

192.168.11.51 / 2019-05-21 13:51:47

E.O.C.R 권고 SETTING 치

* POWER SOURCE : AC3¢ 480V 60Hz

극동호아스트 (주)

MOTOR 용량	MOTOR 정격 전류	DRIVE TYPE	E.O.C.R TYPE	권고 SETTING 치			REMARK
				DELAY TIME	OPERATION TIME	CURRENT	
0.2KW x 6P	0.9 A	1 DRIVE	SS - 05	3 SEC	1 SEC	0.9 A	
		2DRIVE	SS - 05	3 SEC	1 SEC	1.8 A	
0.4KW x 4P	1.2 A	1 DRIVE	SS - 05	3 SEC	1 SEC	1.2 A	
		2DRIVE	SS - 05	3 SEC	1 SEC	2.4 A	
0.5KW x 6P	1.6 A	1 DRIVE	SS - 05	3 SEC	1 SEC	1.6 A	
		2DRIVE	SS - 05	3 SEC	1 SEC	3.2 A	
0.75KW x 4P	1.9 A	1 DRIVE	SS - 05	3 SEC	1 SEC	1.9 A	
		2DRIVE	SS - 05	3 SEC	1 SEC	3.8 A	
1.0KW x 6P	3.1 A	1 DRIVE	SS - 05	3 SEC	1 SEC	2.1 A	
		2DRIVE	SS - 30	3 SEC	1 SEC	4.2 A	
1.5KW x 4P	3.4 A	1 DRIVE	SS - 05	3 SEC	1 SEC	3.4 A	
		2DRIVE	SS - 30	3 SEC	1 SEC	6.8 A	
1.5KW x 6P	3.5 A	1 DRIVE	SS - 05	3 SEC	1 SEC	3.5 A	
		2DRIVE	SS - 30	3 SEC	1 SEC	7.0 A	
2.2KW x 4P	4.6 A	1 DRIVE	SS - 05	3 SEC	1 SEC	4.6 A	
		2 DRIVE	SS - 30	3 SEC	1 SEC	9.2 A	
0.8/0.4KW x 4/8P	2.22/2.05 A	1 DRIVE	SS - 05	3 SEC	1 SEC	2.22 A	
			SS - 05	3 SEC	1 SEC	2.05 A	
		2 DRIVE	SS - 05	3 SEC	1 SEC	4.44 A	
			SS - 05	3 SEC	1 SEC	4.1 A	
2.2KW x 6P	4.6 A	1 DRIVE	SS - 05	3 SEC	1 SEC	4.6 A	
		2DRIVE	SS - 30	3 SEC	1 SEC	9.2 A	
3.7KW x 4P	7.3 A	1 DRIVE	SS - 30	3 SEC	1 SEC	7.3 A	
		2DRIVE	SS - 30	3 SEC	1 SEC	14.6 A	

NOTE

1, 상기 TABLE의 수치는 권고 SETTING 수치이며 MOTOR의 특성 및 현장 조건에 따라 변경 가능함.

192.168.11.51 / 2019-05-21 13:51:47

무단복제 및 배포금지

불법복제 및 배포금지

THREE PHASE INDUCTION MOTOR DATA SHEET

SCHEDULE OF TECHNICAL DATA

1. SERVICE	HOISTING
2. MANUFACTURE	극동 호이스트 (주)
3. FRAME NUMBER	200 M
4. RATED POWER	13 KW x 8 P
5. RATED VOLTAGE AND FREQUENCY	220 V 60 Hz
6. MOTOR TYPE	SQUIRREL CAGE ROTOR TYPE
7. SERVICE FACTOR AND RATTING	1 . 0 , 30 MIN
8. LOCATION AND INSULATION CLASS	INDOOR, OUTDOOR, B CLASS
9. DESIGN TEMPERATURE RISE(BY RESISTANCE)	80 ℃
10. FULL LOAD SPEED	870 RPM
11. FULL LOAD CURRENT	59.0 A
12. STARTING CURRENT AT RATED VOLTAGE	344.5 A
13. MINIMUM STARTING VOLTAGE	198 V
14. EFFICIENCY AT 100% RATED LOAD	82.0 %
15. POWER FACTOR AT 100% RATED LOAD	70.5 %
16. STARTING TORQUE	31.2 KG.M
17. SITE ALTITUDE(UNDER)	1000 M
18. ENCLOSURE & COOLING METHOD	T E N V
19. TYPE OF BEARING	PL : 6311zz OPL : 6311zz
20. MOUNTING	H O R I Z O N T A L
21. MAXIMUM AMBIENT TEMPERATURE	40 ℃
22. BEARING LUBRICATION	G R E A S E
23. STARTING METHOD	F U L L V O L T A G E

192.168.11.51 / 2019-05-21 13:51:47

불법복제 및 배포금지

THREE PHASE INDUCTION MOTOR DATA SHEET

SCHEDULE OF TECHNICAL DATA

1. SERVICE	HOISTING
2. MANUFACTURE	극동 호이스트 (주)
3. FRAME NUMBER	200 M
4. RATED POWER	13 KW x 8 P
5. RATED VOLTAGE AND FREQUENCY	380 V 60 Hz
6. MOTOR TYPE	SQUIRREL CAGE ROTOR TYPE
7. SERVICE FACTOR AND RATTING	1 . 0 , 30 MIN
8. LOCATION AND INSULATION CLASS	INDOOR, OUTDOOR, B CLASS
9. DESIGN TEMPERATURE RISE(BY RESISTANCE)	80 ℃
10. FULL LOAD SPEED	870 RPM
11. FULL LOAD CURRENT	34.2 A
12. STARTING CURRENT AT RATED VOLTAGE	199 A
13. MINIMUM STARTING VOLTAGE	342 V
14. EFFICIENCY AT 100% RATED LOAD	82.0 %
15. POWER FACTOR AT 100% RATED LOAD	70.5 %
16. STARTING TORQUE	31.2 KG.M
17. SITE ALTITUDE(UNDER)	1000 M
18. ENCLOSURE & COOLING METHOD	T E N V
19. TYPE OF BEARING	PL : 6311zz OPL : 6311zz
20. MOUNTING	H O R I Z O N T A L
21. MAXIMUM AMBIENT TEMPERATURE	40 ℃
22. BEARING LUBRICATION	G R E A S E
23. STARTING METHOD	F U L L V O L T A G E

192.168.11.51 / 2019-05-21 13:51:47

불법복제 및 배포금지

THREE PHASE INDUCTION MOTOR DATA SHEET

SCHEDULE OF TECHNICAL DATA

1. SERVICE	HOISTING
2. MANUFACTURE	극동 호이스트 (주)
3. FRAME NUMBER	200 M
4. RATED POWER	13 KW x 8 P
5. RATED VOLTAGE AND FREQUENCY	440 V 60 Hz
6. MOTOR TYPE	SQUIRREL CAGE ROTOR TYPE
7. SERVICE FACTOR AND RATTING	1 . 0 , 30 MIN
8. LOCATION AND INSULATION CLASS	INDOOR, OUTDOOR, B CLASS
9. DESIGN TEMPERATURE RISE(BY RESISTANCE)	80 ℃
10. FULL LOAD SPEED	870 RPM
11. FULL LOAD CURRENT	29.5 A
12. STARTING CURRENT AT RATED VOLTAGE	173 A
13. MINIMUM STARTING VOLTAGE	396 V
14. EFFICIENCY AT 100% RATED LOAD	82.0 %
15. POWER FACTOR AT 100% RATED LOAD	70.5 %
16. STARTING TORQUE	31.2 KG.M
17. SITE ALTITUDE(UNDER)	1000 M
18. ENCLOSURE & COOLING METHOD	T E N V
19. TYPE OF BEARING	PL : 6311zz OPL : 6311zz
20. MOUNTING	H O R I Z O N T A L
21. MAXIMUM AMBIENT TEMPERATURE	40 ℃
22. BEARING LUBRICATION	G R E A S E
23. STARTING METHOD	F U L L V O L T A G E

192.168.11.51 / 2019-05-21 13:51:47

불법복제 및 배포금지

THREE PHASE INDUCTION MOTOR DATA SHEET

SCHEDULE OF TECHNICAL DATA

1. SERVICE	HOISTING
2. MANUFACTURE	극동 호이스트 (주)
3. FRAME NUMBER	200 M
4. RATED POWER	13 KW x 8 P
5. RATED VOLTAGE AND FREQUENCY	460 V 60 Hz
6. MOTOR TYPE	SQUIRREL CAGE ROTOR TYPE
7. SERVICE FACTOR AND RATTING	1 . 0 , 30 MIN
8. LOCATION AND INSULATION CLASS	INDOOR, OUTDOOR, B CLASS
9. DESIGN TEMPERATURE RISE(BY RESISTANCE)	80 ℃
10. FULL LOAD SPEED	870 RPM
11. FULL LOAD CURRENT	28.4 A
12. STARTING CURRENT AT RATED VOLTAGE	164.8 A
13. MINIMUM STARTING VOLTAGE	414 V
14. EFFICIENCY AT 100% RATED LOAD	82.0 %
15. POWER FACTOR AT 100% RATED LOAD	70.5 %
16. STARTING TORQUE	31.2 KG.M
17. SITE ALTITUDE(UNDER)	1000 M
18. ENCLOSURE & COOLING METHOD	T E N V
19. TYPE OF BEARING	PL : 6311zz OPL : 6311zz
20. MOUNTING	H O R I Z O N T A L
21. MAXIMUM AMBIENT TEMPERATURE	40 ℃
22. BEARING LUBRICATION	G R E A S E
23. STARTING METHOD	F U L L V O L T A G E

192.168.11.51 / 2019-05-21 13:51:47

불법복제 및 배포금지

THREE PHASE INDUCTION MOTOR DATA SHEET

SCHEDULE OF TECHNICAL DATA

1. SERVICE	HOISTING
2. MANUFACTURE	극동 호이스트 (주)
3. FRAME NUMBER	200 M
4. RATED POWER	13 KW x 8 P
5. RATED VOLTAGE AND FREQUENCY	480 V 60 Hz
6. MOTOR TYPE	SQUIRREL CAGE ROTOR TYPE
7. SERVICE FACTOR AND RATTING	1 . 0 , 30 MIN
8. LOCATION AND INSULATION CLASS	INDOOR, OUTDOOR, B CLASS
9. DESIGN TEMPERATURE RISE(BY RESISTANCE)	80 ℃
10. FULL LOAD SPEED	870 RPM
11. FULL LOAD CURRENT	27.2 A
12. STARTING CURRENT AT RATED VOLTAGE	158.0 A
13. MINIMUM STARTING VOLTAGE	432 V
14. EFFICIENCY AT 100% RATED LOAD	82.0 %
15. POWER FACTOR AT 100% RATED LOAD	70.5 %
16. STARTING TORQUE	31.2 KG.M
17. SITE ALTITUDE(UNDER)	1000 M
18. ENCLOSURE & COOLING METHOD	T E N V
19. TYPE OF BEARING	PL : 6311zz OPL : 6311zz
20. MOUNTING	H O R I Z O N T A L
21. MAXIMUM AMBIENT TEMPERATURE	40 ℃
22. BEARING LUBRICATION	G R E A S E
23. STARTING METHOD	F U L L V O L T A G E

192.168.11.51 / 2019-05-21 13:51:47

불법복제 및 배포금지

THREE PHASE INDUCTION MOTOR DATA SHEET

SCHEDULE OF TECHNICAL DATA

1. SERVICE	HOISTING
2. MANUFACTURE	극동 호이스트 (주)
3. FRAME NUMBER	200 M
4. RATED POWER	8.5 KW x 12 P
5. RATED VOLTAGE AND FREQUENCY	220 V 60 Hz
6. MOTOR TYPE	SQUIRREL CAGE ROTOR TYPE
7. SERVICE FACTOR AND RATTING	1 . 0 , 30 MIN
8. LOCATION AND INSULATION CLASS	INDOOR, OUTDOOR, B CLASS
9. DESIGN TEMPERATURE RISE(BY RESISTANCE)	80 ℃
10. FULL LOAD SPEED	576 RPM
11. FULL LOAD CURRENT	58.6 A
12. STARTING CURRENT AT RATED VOLTAGE	263.7 A
13. MINIMUM STARTING VOLTAGE	198 V
14. EFFICIENCY AT 100% RATED LOAD	77.5 %
15. POWER FACTOR AT 100% RATED LOAD	49.0 %
16. STARTING TORQUE	28.11 KG.M
17. SITE ALTITUDE(UNDER)	1000 M
18. ENCLOSURE & COOLING METHOD	T E N V
19. TYPE OF BEARING	PL : 6311zz OPL : 6311zz
20. MOUNTING	H O R I Z O N T A L
21. MAXIMUM AMBIENT TEMPERATURE	40 ℃
22. BEARING LUBRICATION	G R E A S E
23. STARTING METHOD	F U L L V O L T A G E

192.168.11.51 / 2019-05-21 13:51:47

불법복제 및 배포금지

THREE PHASE INDUCTION MOTOR DATA SHEET

SCHEDULE OF TECHNICAL DATA

1. SERVICE	HOISTING
2. MANUFACTURE	극동 호이스트 (주)
3. FRAME NUMBER	200 M
4. RATED POWER	8.5 KW x 12 P
5. RATED VOLTAGE AND FREQUENCY	380 V 60 Hz
6. MOTOR TYPE	SQUIRREL CAGE ROTOR TYPE
7. SERVICE FACTOR AND RATTING	1 . 0 , 30 MIN
8. LOCATION AND INSULATION CLASS	INDOOR, OUTDOOR, B CLASS
9. DESIGN TEMPERATURE RISE(BY RESISTANCE)	80 ℃
10. FULL LOAD SPEED	576 RPM
11. FULL LOAD CURRENT	33.9 A
12. STARTING CURRENT AT RATED VOLTAGE	152.6 A
13. MINIMUM STARTING VOLTAGE	342 V
14. EFFICIENCY AT 100% RATED LOAD	77.5 %
15. POWER FACTOR AT 100% RATED LOAD	49.0 %
16. STARTING TORQUE	28.11 KG.M
17. SITE ALTITUDE(UNDER)	1000 M
18. ENCLOSURE & COOLING METHOD	T E N V
19. TYPE OF BEARING	PL : 6311zz OPL : 6311zz
20. MOUNTING	H O R I Z O N T A L
21. MAXIMUM AMBIENT TEMPERATURE	40 ℃
22. BEARING LUBRICATION	G R E A S E
23. STARTING METHOD	F U L L V O L T A G E

192.168.11.51 / 2019-05-21 13:51:47

불법복제 및 배포금지

THREE PHASE INDUCTION MOTOR DATA SHEET

SCHEDULE OF TECHNICAL DATA

1. SERVICE	HOISTING
2. MANUFACTURE	극동 호이스트 (주)
3. FRAME NUMBER	200 M
4. RATED POWER	8.5 KW x 12 P
5. RATED VOLTAGE AND FREQUENCY	440 V 60 Hz
6. MOTOR TYPE	SQUIRREL CAGE ROTOR TYPE
7. SERVICE FACTOR AND RATTING	1 . 0 , 30 MIN
8. LOCATION AND INSULATION CLASS	INDOOR, OUTDOOR, B CLASS
9. DESIGN TEMPERATURE RISE(BY RESISTANCE)	80 ℃
10. FULL LOAD SPEED	576 RPM
11. FULL LOAD CURRENT	29.3 A
12. STARTING CURRENT AT RATED VOLTAGE	131.9 A
13. MINIMUM STARTING VOLTAGE	396 V
14. EFFICIENCY AT 100% RATED LOAD	77.5 %
15. POWER FACTOR AT 100% RATED LOAD	49.0 %
16. STARTING TORQUE	28.11 KG.M
17. SITE ALTITUDE(UNDER)	1000 M
18. ENCLOSURE & COOLING METHOD	T E N V
19. TYPE OF BEARING	PL : 6311zz OPL : 6311zz
20. MOUNTING	H O R I Z O N T A L
21. MAXIMUM AMBIENT TEMPERATURE	40 ℃
22. BEARING LUBRICATION	G R E A S E
23. STARTING METHOD	F U L L V O L T A G E

192.168.11.51 / 2019-05-21 13:51:47

불법복제 및 배포금지

THREE PHASE INDUCTION MOTOR DATA SHEET

SCHEDULE OF TECHNICAL DATA

1. SERVICE	HOISTING
2. MANUFACTURE	극동 호이스트 (주)
3. FRAME NUMBER	200 M
4. RATED POWER	8.5 KW x 12 P
5. RATED VOLTAGE AND FREQUENCY	460 V 60 Hz
6. MOTOR TYPE	SQUIRREL CAGE ROTOR TYPE
7. SERVICE FACTOR AND RATTING	1 . 0 , 30 MIN
8. LOCATION AND INSULATION CLASS	INDOOR, OUTDOOR, B CLASS
9. DESIGN TEMPERATURE RISE(BY RESISTANCE)	80 ℃
10. FULL LOAD SPEED	576 RPM
11. FULL LOAD CURRENT	28.1 A
12. STARTING CURRENT AT RATED VOLTAGE	126.5 A
13. MINIMUM STARTING VOLTAGE	414 V
14. EFFICIENCY AT 100% RATED LOAD	77.5 %
15. POWER FACTOR AT 100% RATED LOAD	49.0 %
16. STARTING TORQUE	28.11 KG.M
17. SITE ALTITUDE(UNDER)	1000 M
18. ENCLOSURE & COOLING METHOD	T E N V
19. TYPE OF BEARING	PL : 6311zz OPL : 6311zz
20. MOUNTING	H O R I Z O N T A L
21. MAXIMUM AMBIENT TEMPERATURE	40 ℃
22. BEARING LUBRICATION	G R E A S E
23. STARTING METHOD	F U L L V O L T A G E

192.168.11.51 / 2019-05-21 13:51:47

불법복제 및 배포금지

THREE PHASE INDUCTION MOTOR DATA SHEET

SCHEDULE OF TECHNICAL DATA

1. SERVICE	HOISTING
2. MANUFACTURE	극동 호이스트 (주)
3. FRAME NUMBER	200 M
4. RATED POWER	8.5 KW x 12 P
5. RATED VOLTAGE AND FREQUENCY	480 V 60 Hz
6. MOTOR TYPE	SQUIRREL CAGE ROTOR TYPE
7. SERVICE FACTOR AND RATTING	1 . 0 , 30 MIN
8. LOCATION AND INSULATION CLASS	INDOOR, OUTDOOR, B CLASS
9. DESIGN TEMPERATURE RISE(BY RESISTANCE)	80 ℃
10. FULL LOAD SPEED	576 RPM
11. FULL LOAD CURRENT	26.9 A
12. STARTING CURRENT AT RATED VOLTAGE	121.2 A
13. MINIMUM STARTING VOLTAGE	432 V
14. EFFICIENCY AT 100% RATED LOAD	77.5 %
15. POWER FACTOR AT 100% RATED LOAD	49.0 %
16. STARTING TORQUE	28.11 KG.M
17. SITE ALTITUDE(UNDER)	1000 M
18. ENCLOSURE & COOLING METHOD	T E N V
19. TYPE OF BEARING	PL : 6311zz OPL : 6311zz
20. MOUNTING	H O R I Z O N T A L
21. MAXIMUM AMBIENT TEMPERATURE	40 ℃
22. BEARING LUBRICATION	G R E A S E
23. STARTING METHOD	F U L L V O L T A G E

192.168.11.51 / 2019-05-21 13:51:47

불법복제 및 배포금지

THREE PHASE INDUCTION MOTOR DATA SHEET

SCHEDULE OF TECHNICAL DATA

1. SERVICE	TRAVERSING
2. MANUFACTURE	극동호이스트 (주)
3. FRAME NUMBER	90 L
4. RATED POWER	1.5 KW x 4 P
5. RATED VOLTAGE AND FREQUENCY	220 V 60 Hz
6. MOTOR TYPE	SQUIRREL CAGE ROTOR TYPE
7. SERVICE FACTOR AND RATTING	1 . 0 , 30 MIN
8. LOCATION AND INSULATION CLASS	INDOOR, OUTDOOR, B CLASS
9. DESIGN TEMPERATURE RISE(BY RESISTANCE)	80 ℃
10. FULL LOAD SPEED	1710 RPM
11. FULL LOAD CURRENT	7.3 A
12. STARTING CURRENT AT RATED VOLTAGE	42.0 A
13. MINIMUM STARTING VOLTAGE	198 V
14. EFFICIENCY AT 100% RATED LOAD	73.0 %
15. POWER FACTOR AT 100% RATED LOAD	75.0 %
16. STARTING TORQUE	1.72 KG.M
17. SITE ALTITUDE(UNDER)	1000 M
18. ENCLOSURE & COOLING METHOD	T E N V
19. TYPE OF BEARING	PL : 6205zz OPL : 6204zz
20. MOUNTING	H O R I Z O N T A L
21. MAXIMUM AMBIENT TEMPERATURE	40 ℃
22. BEARING LUBRICATION	G R E A S E
23. STARTING METHOD	F U L L V O L T A G E

192.168.11.51 / 2019-05-21 13:51:47

불법복제 및 배포금지

THREE PHASE INDUCTION MOTOR DATA SHEET

SCHEDULE OF TECHNICAL DATA

1. SERVICE	TRAVERSING
2. MANUFACTURE	극동호이스트 (주)
3. FRAME NUMBER	90 L
4. RATED POWER	1.5 KW x 4 P
5. RATED VOLTAGE AND FREQUENCY	380 V 60 Hz
6. MOTOR TYPE	SQUIRREL CAGE ROTOR TYPE
7. SERVICE FACTOR AND RATTING	1 . 0 , 30 MIN
8. LOCATION AND INSULATION CLASS	INDOOR, OUTDOOR, B CLASS
9. DESIGN TEMPERATURE RISE(BY RESISTANCE)	80 ℃
10. FULL LOAD SPEED	1710 RPM
11. FULL LOAD CURRENT	4.2 A
12. STARTING CURRENT AT RATED VOLTAGE	24.2 A
13. MINIMUM STARTING VOLTAGE	342 V
14. EFFICIENCY AT 100% RATED LOAD	73.0 %
15. POWER FACTOR AT 100% RATED LOAD	75.0 %
16. STARTING TORQUE	1.72 KG.M
17. SITE ALTITUDE(UNDER)	1000 M
18. ENCLOSURE & COOLING METHOD	T E N V
19. TYPE OF BEARING	PL : 6205zz OPL : 6204zz
20. MOUNTING	H O R I Z O N T A L
21. MAXIMUM AMBIENT TEMPERATURE	40 ℃
22. BEARING LUBRICATION	G R E A S E
23. STARTING METHOD	F U L L V O L T A G E

192.168.11.51 / 2019-05-21 13:51:47

불법복제 및 배포금지

THREE PHASE INDUCTION MOTOR DATA SHEET

SCHEDULE OF TECHNICAL DATA

1. SERVICE	TRAVERSING
2. MANUFACTURE	극동호이스트 (주)
3. FRAME NUMBER	90 L
4. RATED POWER	1.5 KW x 4 P
5. RATED VOLTAGE AND FREQUENCY	440 V 60 Hz
6. MOTOR TYPE	SQUIRREL CAGE ROTOR TYPE
7. SERVICE FACTOR AND RATTING	1 . 0 , 30 MIN
8. LOCATION AND INSULATION CLASS	INDOOR, OUTDOOR, B CLASS
9. DESIGN TEMPERATURE RISE(BY RESISTANCE)	80 ℃
10. FULL LOAD SPEED	1710 RPM
11. FULL LOAD CURRENT	3.7A
12. STARTING CURRENT AT RATED VOLTAGE	21.0 A
13. MINIMUM STARTING VOLTAGE	396 V
14. EFFICIENCY AT 100% RATED LOAD	73.0 %
15. POWER FACTOR AT 100% RATED LOAD	75.0 %
16. STARTING TORQUE	1.72 KG.M
17. SITE ALTITUDE(UNDER)	1000 M
18. ENCLOSURE & COOLING METHOD	T E N V
19. TYPE OF BEARING	PL : 6205zz OPL : 6204zz
20. MOUNTING	H O R I Z O N T A L
21. MAXIMUM AMBIENT TEMPERATURE	40 ℃
22. BEARING LUBRICATION	G R E A S E
23. STARTING METHOD	F U L L V O L T A G E

192.168.11.51 / 2019-05-21 13:51:47

불법복제 및 배포금지

THREE PHASE INDUCTION MOTOR DATA SHEET

SCHEDULE OF TECHNICAL DATA

1. SERVICE	TRAVERSING
2. MANUFACTURE	극동호이스트 (주)
3. FRAME NUMBER	90 L
4. RATED POWER	1.5 KW x 4 P
5. RATED VOLTAGE AND FREQUENCY	460 V 60 Hz
6. MOTOR TYPE	SQUIRREL CAGE ROTOR TYPE
7. SERVICE FACTOR AND RATTING	1 . 0 , 30 MIN
8. LOCATION AND INSULATION CLASS	INDOOR, OUTDOOR, B CLASS
9. DESIGN TEMPERATURE RISE(BY RESISTANCE)	80 ℃
10. FULL LOAD SPEED	1710 RPM
11. FULL LOAD CURRENT	3.5A
12. STARTING CURRENT AT RATED VOLTAGE	20.8 A
13. MINIMUM STARTING VOLTAGE	414 V
14. EFFICIENCY AT 100% RATED LOAD	73.0 %
15. POWER FACTOR AT 100% RATED LOAD	75.0 %
16. STARTING TORQUE	1.72 KG.M
17. SITE ALTITUDE(UNDER)	1000 M
18. ENCLOSURE & COOLING METHOD	T E N V
19. TYPE OF BEARING	PL : 6205zz OPL : 6204zz
20. MOUNTING	H O R I Z O N T A L
21. MAXIMUM AMBIENT TEMPERATURE	40 ℃
22. BEARING LUBRICATION	G R E A S E
23. STARTING METHOD	F U L L V O L T A G E

192.168.11.51 / 2019-05-21 13:51:47

불법복제 및 배포금지

THREE PHASE INDUCTION MOTOR DATA SHEET

SCHEDULE OF TECHNICAL DATA

1. SERVICE	TRAVERSING
2. MANUFACTURE	극동호이스트 (주)
3. FRAME NUMBER	90 L
4. RATED POWER	1.5 KW x 4 P
5. RATED VOLTAGE AND FREQUENCY	480 V 60 Hz
6. MOTOR TYPE	SQUIRREL CAGE ROTOR TYPE
7. SERVICE FACTOR AND RATTING	1 . 0 , 30 MIN
8. LOCATION AND INSULATION CLASS	INDOOR, OUTDOOR, B CLASS
9. DESIGN TEMPERATURE RISE(BY RESISTANCE)	80 ℃
10. FULL LOAD SPEED	1710 RPM
11. FULL LOAD CURRENT	3.4A
12. STARTING CURRENT AT RATED VOLTAGE	20.0 A
13. MINIMUM STARTING VOLTAGE	432 V
14. EFFICIENCY AT 100% RATED LOAD	73.0 %
15. POWER FACTOR AT 100% RATED LOAD	75.0 %
16. STARTING TORQUE	1.72 KG.M
17. SITE ALTITUDE(UNDER)	1000 M
18. ENCLOSURE & COOLING METHOD	T E N V
19. TYPE OF BEARING	PL : 6205zz OPL : 6204zz
20. MOUNTING	H O R I Z O N T A L
21. MAXIMUM AMBIENT TEMPERATURE	40 ℃
22. BEARING LUBRICATION	G R E A S E
23. STARTING METHOD	F U L L V O L T A G E

192.168.11.51 / 2019-05-21 13:51:47

불법복제 및 배포금지

THREE PHASE INDUCTION MOTOR DATA SHEET

SCHEDULE OF TECHNICAL DATA

1. SERVICE	TRAVERSING
2. MANUFACTURE	극동 호이스트 (주)
3. FRAME NUMBER	80 S
4. RATED POWER	1.0 KW x 6 P
5. RATED VOLTAGE AND FREQUENCY	220 V 60 Hz
6. MOTOR TYPE	SQUIRREL CAGE ROTOR TYPE
7. SERVICE FACTOR AND RATTING	1 . 0 , 30 MIN
8. LOCATION AND INSULATION CLASS	INDOOR, OUTDOOR, B CLASS
9. DESIGN TEMPERATURE RISE(BY RESISTANCE)	80 ℃
10. FULL LOAD SPEED	1140 RPM
11. FULL LOAD CURRENT	6.7 A
12. LOCKED ROTOR CURRENT	23.8 A
13. MINIMUM STARTING VOLTAGE	198 V
14. EFFICIENCY AT 100% RATED LOAD	63.5 %
15. POWER FACTOR AT 100% RATED LOAD	62.0 %
16. STARTING TORQUE	1.1 KG.M
17. SITE ALTITUDE(UNDER)	1000 M
18. ENCLOSURE & COOLING METHOD	T E N V
19. TYPE OF BEARING	PL : 6207zz OPL : 6204zz
20. MOUNTING	H O R I Z O N T A L
21. MAXIMUM AMBIENT TEMPERATURE	40 ℃
22. BEARING LUBRICATION	G R E A S E
23. STARTING METHOD	F U L L V O L T A G E

192.168.11.51 / 2019-05-21 13:51:47

불법복제 및 배포금지

THREE PHASE INDUCTION MOTOR DATA SHEET

SCHEDULE OF TECHNICAL DATA

1. SERVICE	TRAVERSING
2. MANUFACTURE	극동 호이스트 (주)
3. FRAME NUMBER	80 S
4. RATED POWER	1.0 KW x 6 P
5. RATED VOLTAGE AND FREQUENCY	380 V 60 Hz
6. MOTOR TYPE	SQUIRREL CAGE ROTOR TYPE
7. SERVICE FACTOR AND RATTING	1 . 0 , 30 MIN
8. LOCATION AND INSULATION CLASS	INDOOR, OUTDOOR, B CLASS
9. DESIGN TEMPERATURE RISE(BY RESISTANCE)	80 ℃
10. FULL LOAD SPEED	1140 RPM
11. FULL LOAD CURRENT	3.85 A
12. LOCKED ROTOR CURRENT	13.78 A
13. MINIMUM STARTING VOLTAGE	342 V
14. EFFICIENCY AT 100% RATED LOAD	63.5 %
15. POWER FACTOR AT 100% RATED LOAD	62.0 %
16. STARTING TORQUE	1.1 KG.M
17. SITE ALTITUDE(UNDER)	1000 M
18. ENCLOSURE & COOLING METHOD	T E N V
19. TYPE OF BEARING	PL : 6207zz OPL : 6204zz
20. MOUNTING	H O R I Z O N T A L
21. MAXIMUM AMBIENT TEMPERATURE	40 ℃
22. BEARING LUBRICATION	G R E A S E
23. STARTING METHOD	F U L L V O L T A G E

192.168.11.51 / 2019-05-21 13:51:47

불법복제 및 배포금지

THREE PHASE INDUCTION MOTOR DATA SHEET

SCHEDULE OF TECHNICAL DATA

1. SERVICE	TRAVERSING
2. MANUFACTURE	극동 호이스트 (주)
3. FRAME NUMBER	80 S
4. RATED POWER	1.0 KW x 6 P
5. RATED VOLTAGE AND FREQUENCY	440 V 60 Hz
6. MOTOR TYPE	SQUIRREL CAGE ROTOR TYPE
7. SERVICE FACTOR AND RATTING	1 . 0 , 30 MIN
8. LOCATION AND INSULATION CLASS	INDOOR, OUTDOOR, B CLASS
9. DESIGN TEMPERATURE RISE(BY RESISTANCE)	80 ℃
10. FULL LOAD SPEED	1140 RPM
11. FULL LOAD CURRENT	3.33 A
12. LOCKED ROTOR CURRENT	11.9 A
13. MINIMUM STARTING VOLTAGE	396 V
14. EFFICIENCY AT 100% RATED LOAD	63.5 %
15. POWER FACTOR AT 100% RATED LOAD	62.0 %
16. STARTING TORQUE	1.1 KG.M
17. SITE ALTITUDE(UNDER)	1000 M
18. ENCLOSURE & COOLING METHOD	T E N V
19. TYPE OF BEARING	PL : 6207zz OPL : 6204zz
20. MOUNTING	H O R I Z O N T A L
21. MAXIMUM AMBIENT TEMPERATURE	40 ℃
22. BEARING LUBRICATION	G R E A S E
23. STARTING METHOD	F U L L V O L T A G E

192.168.11.51 / 2019-05-21 13:51:47

불법복제 및 배포금지

THREE PHASE INDUCTION MOTOR DATA SHEET

SCHEDULE OF TECHNICAL DATA

1. SERVICE	TRAVERSING
2. MANUFACTURE	극동 호이스트 (주)
3. FRAME NUMBER	80 S
4. RATED POWER	1.0 KW x 6 P
5. RATED VOLTAGE AND FREQUENCY	460 V 60 Hz
6. MOTOR TYPE	SQUIRREL CAGE ROTOR TYPE
7. SERVICE FACTOR AND RATTING	1 . 0 , 30 MIN
8. LOCATION AND INSULATION CLASS	INDOOR, OUTDOOR, B CLASS
9. DESIGN TEMPERATURE RISE(BY RESISTANCE)	80 ℃
10. FULL LOAD SPEED	1140 RPM
11. FULL LOAD CURRENT	3.2 A
12. LOCKED ROTOR CURRENT	11.37 A
13. MINIMUM STARTING VOLTAGE	414 V
14. EFFICIENCY AT 100% RATED LOAD	63.5 %
15. POWER FACTOR AT 100% RATED LOAD	62.0 %
16. STARTING TORQUE	1.1 KG.M
17. SITE ALTITUDE(UNDER)	1000 M
18. ENCLOSURE & COOLING METHOD	T E N V
19. TYPE OF BEARING	PL : 6207zz OPL : 6204zz
20. MOUNTING	H O R I Z O N T A L
21. MAXIMUM AMBIENT TEMPERATURE	40 ℃
22. BEARING LUBRICATION	G R E A S E
23. STARTING METHOD	F U L L V O L T A G E

192.168.11.51 / 2019-05-21 13:51:47

불법복제 및 배포금지

THREE PHASE INDUCTION MOTOR DATA SHEET

SCHEDULE OF TECHNICAL DATA

1. SERVICE	TRAVERSING
2. MANUFACTURE	극동 호이스트 (주)
3. FRAME NUMBER	80 S
4. RATED POWER	1.0 KW x 6 P
5. RATED VOLTAGE AND FREQUENCY	480 V 60 Hz
6. MOTOR TYPE	SQUIRREL CAGE ROTOR TYPE
7. SERVICE FACTOR AND RATTING	1 . 0 , 30 MIN
8. LOCATION AND INSULATION CLASS	INDOOR, OUTDOOR, B CLASS
9. DESIGN TEMPERATURE RISE(BY RESISTANCE)	80 ℃
10. FULL LOAD SPEED	1140 RPM
11. FULL LOAD CURRENT	3.05 A
12. LOCKED ROTOR CURRENT	10.9 A
13. MINIMUM STARTING VOLTAGE	432 V
14. EFFICIENCY AT 100% RATED LOAD	63.5 %
15. POWER FACTOR AT 100% RATED LOAD	62.0 %
16. STARTING TORQUE	1.1 KG.M
17. SITE ALTITUDE(UNDER)	1000 M
18. ENCLOSURE & COOLING METHOD	T E N V
19. TYPE OF BEARING	PL : 6207zz OPL : 6204zz
20. MOUNTING	H O R I Z O N T A L
21. MAXIMUM AMBIENT TEMPERATURE	40 ℃
22. BEARING LUBRICATION	G R E A S E
23. STARTING METHOD	F U L L V O L T A G E

192.168.11.51 / 2019-05-21 13:51:47

불법복제 및 배포금지

THREE PHASE INDUCTION MOTOR DATA SHEET

SCHEDULE OF TECHNICAL DATA

1. SERVICE	TRAVERSING
2. MANUFACTURE	극동호이스트(주)
3. FRAME NUMBER	112 S
4. RATED POWER	1.5/0.75 KW x 4/8 P
5. RATED VOLTAGE AND FREQUENCY	220 V 60 Hz
6. MOTOR TYPE	SQUIRREL CAGE ROTOR TYPE
7. SERVICE FACTOR AND RATTING	1 . 0 , 30 MIN
8. LOCATION AND INSULATION CLASS	INDOOR, OUTDOOR, B CLASS
9. DESIGN TEMPERATURE RISE(BY RESISTANCE)	80 ℃
10. FULL LOAD SPEED	1670/815 RPM
11. FULL LOAD CURRENT	7.2/6.2 A
12. STARTING CURRENT AT RATED VOLTAGE	35.6/21.7 A
13. MINIMUM STARTING VOLTAGE	198 V
14. EFFICIENCY AT 100% RATED LOAD	69.5/63 %
15. POWER FACTOR AT 100% RATED LOAD	74/50 %
16. STARTING TORQUE	1.48/1.22 KG.M
17. SITE ALTITUDE(UNDER)	1000 M
18. ENCLOSURE & COOLING METHOD	T E N V
19. TYPE OF BEARING	PL : 6206zz OPL : 6206zz
20. MOUNTING	H O R I Z O N T A L
21. MAXIMUM AMBIENT TEMPERATURE	40 ℃
22. BEARING LUBRICATION	G R E A S E
23. STARTING METHOD	F U L L V O L T A G E

192.168.11.51 / 2019-05-21 13:51:47

불법복제 및 배포금지

THREE PHASE INDUCTION MOTOR DATA SHEET

SCHEDULE OF TECHNICAL DATA

1. SERVICE	TRAVERSING
2. MANUFACTURE	극동호이스트(주)
3. FRAME NUMBER	112 S
4. RATED POWER	1.5/0.75 KW x 4/8 P
5. RATED VOLTAGE AND FREQUENCY	380 V 60 Hz
6. MOTOR TYPE	SQUIRREL CAGE ROTOR TYPE
7. SERVICE FACTOR AND RATTING	1 . 0 , 30 MIN
8. LOCATION AND INSULATION CLASS	INDOOR, OUTDOOR, B CLASS
9. DESIGN TEMPERATURE RISE(BY RESISTANCE)	80 ℃
10. FULL LOAD SPEED	1670/815 RPM
11. FULL LOAD CURRENT	4.17/3.59 A
12. STARTING CURRENT AT RATED VOLTAGE	20.6/12.56 A
13. MINIMUM STARTING VOLTAGE	342 V
14. EFFICIENCY AT 100% RATED LOAD	69.5/63 %
15. POWER FACTOR AT 100% RATED LOAD	74/50 %
16. STARTING TORQUE	1.48/1.22 KG.M
17. SITE ALTITUDE(UNDER)	1000 M
18. ENCLOSURE & COOLING METHOD	T E N V
19. TYPE OF BEARING	PL : 6206zz OPL : 6206zz
20. MOUNTING	H O R I Z O N T A L
21. MAXIMUM AMBIENT TEMPERATURE	40 ℃
22. BEARING LUBRICATION	G R E A S E
23. STARTING METHOD	F U L L V O L T A G E

192.168.11.51 / 2019-05-21 13:51:47

불법복제 및 배포금지

THREE PHASE INDUCTION MOTOR DATA SHEET

SCHEDULE OF TECHNICAL DATA

1. SERVICE	TRAVERSING
2. MANUFACTURE	극동호이스트(주)
3. FRAME NUMBER	112 S
4. RATED POWER	1.5/0.75 KW x 4/8 P
5. RATED VOLTAGE AND FREQUENCY	440 V 60 Hz
6. MOTOR TYPE	SQUIRREL CAGE ROTOR TYPE
7. SERVICE FACTOR AND RATTING	1 . 0 , 30 MIN
8. LOCATION AND INSULATION CLASS	INDOOR, OUTDOOR, B CLASS
9. DESIGN TEMPERATURE RISE(BY RESISTANCE)	80 ℃
10. FULL LOAD SPEED	1670/815 RPM
11. FULL LOAD CURRENT	3.6/3.1 A
12. STARTING CURRENT AT RATED VOLTAGE	17.8/10.85 A
13. MINIMUM STARTING VOLTAGE	396 V
14. EFFICIENCY AT 100% RATED LOAD	69.5/63 %
15. POWER FACTOR AT 100% RATED LOAD	74/50 %
16. STARTING TORQUE	1.48/1.22 KG.M
17. SITE ALTITUDE(UNDER)	1000 M
18. ENCLOSURE & COOLING METHOD	T E N V
19. TYPE OF BEARING	PL : 6206zz OPL : 6206zz
20. MOUNTING	H O R I Z O N T A L
21. MAXIMUM AMBIENT TEMPERATURE	40 ℃
22. BEARING LUBRICATION	G R E A S E
23. STARTING METHOD	F U L L V O L T A G E

192.168.11.51 / 2019-05-21 13:51:47

불법복제 및 배포금지

THREE PHASE INDUCTION MOTOR DATA SHEET

SCHEDULE OF TECHNICAL DATA

1. SERVICE	TRAVERSING
2. MANUFACTURE	극동호이스트(주)
3. FRAME NUMBER	112 S
4. RATED POWER	1.5/0.75 KW x 4/8 P
5. RATED VOLTAGE AND FREQUENCY	460 V 60 Hz
6. MOTOR TYPE	SQUIRREL CAGE ROTOR TYPE
7. SERVICE FACTOR AND RATTING	1 . 0 , 30 MIN
8. LOCATION AND INSULATION CLASS	INDOOR, OUTDOOR, B CLASS
9. DESIGN TEMPERATURE RISE(BY RESISTANCE)	80 ℃
10. FULL LOAD SPEED	1700/815 RPM
11. FULL LOAD CURRENT	3.44/2.96 A
12. STARTING CURRENT AT RATED VOLTAGE	1670/815 RPM
13. MINIMUM STARTING VOLTAGE	414 V
14. EFFICIENCY AT 100% RATED LOAD	69.5/63 %
15. POWER FACTOR AT 100% RATED LOAD	74/50 %
16. STARTING TORQUE	1.48/1.22 KG.M
17. SITE ALTITUDE(UNDER)	1000 M
18. ENCLOSURE & COOLING METHOD	T E N V
19. TYPE OF BEARING	PL : 6206zz OPL : 6206zz
20. MOUNTING	H O R I Z O N T A L
21. MAXIMUM AMBIENT TEMPERATURE	40 ℃
22. BEARING LUBRICATION	G R E A S E
23. STARTING METHOD	F U L L V O L T A G E

192.168.11.51 / 2019-05-21 13:51:47

불법복제 및 배포금지

THREE PHASE INDUCTION MOTOR DATA SHEET

SCHEDULE OF TECHNICAL DATA

1. SERVICE	TRAVERSING
2. MANUFACTURE	극동호이스트(주)
3. FRAME NUMBER	112 S
4. RATED POWER	1.5/0.75 KW x 4/8 P
5. RATED VOLTAGE AND FREQUENCY	480 V 60 Hz
6. MOTOR TYPE	SQUIRREL CAGE ROTOR TYPE
7. SERVICE FACTOR AND RATTING	1 . 0 , 30 MIN
8. LOCATION AND INSULATION CLASS	INDOOR, OUTDOOR, B CLASS
9. DESIGN TRMPERATURE RISE(BY RESISTANCE)	80 ℃
10. FULL LOAD SPEED	1670/815 RPM
11. FULL LOAD CURRENT	3.5/3.0 A
12. STARTING CURRENT AT RATED VOLTAGE	17.5/10.76 A
13. MINIMUM STARTING VOLTAGE	432 V
14. EFFICIENCY AT 100% RATED LOAD	69.5/63 %
15. POWER FACTOR AT 100% RATED LOAD	74/50 %
16. STARTING TORQUE	1.48/1.22 KG.M
17. SITE ALTTITUDE(UNDER)	1000 M
18. ENCLOSURE & COOLING METHOD	T E N V
19. TYPE OF BEARING	PL : 6206zz OPL : 6206zz
20. MOUNTING	H O R I Z O N T A L
21. MAXIMUM AMBIENT TEMPERATURE	40 ℃
22. BEARING LUBRICATION	G R E A S E
23. STARTING METHOD	F U L L V O L T A G E

192.168.11.51 / 2019-05-21 13:51:47

불법복제 및 배포금지

THREE PHASE INDUCTION MOTOR DATA SHEET

SCHEDULE OF TECHNICAL DATA

1. SERVICE	TRAVERSING
2. MANUFACTURE	극동호이스트(주)
3. FRAME NUMBER	112 S
4. RATED POWER	1.0/0.5 KW x 6/12 P
5. RATED VOLTAGE AND FREQUENCY	220 V 60 Hz
6. MOTOR TYPE	SQUIRREL CAGE ROTOR TYPE
7. SERVICE FACTOR AND RATTING	1 . 0 , 30 MIN
8. LOCATION AND INSULATION CLASS	INDOOR, OUTDOOR, B CLASS
9. DESIGN TEMPERATURE RISE(BY RESISTANCE)	80 ℃
10. FULL LOAD SPEED	1050/460 RPM
11. FULL LOAD CURRENT	7.1/7.5 A
12. STARTING CURRENT AT RATED VOLTAGE	28.3/22.5 A
13. MINIMUM STARTING VOLTAGE	198 V
14. EFFICIENCY AT 100% RATED LOAD	59.5/35.0 %
15. POWER FACTOR AT 100% RATED LOAD	64.5/54.0 %
16. STARTING TORQUE	1.67/1.48 KG.M
17. SITE ALTITUDE(UNDER)	1000 M
18. ENCLOSURE & COOLING METHOD	T E N V
19. TYPE OF BEARING	PL : 6206zz OPL : 6206zz
20. MOUNTING	H O R I Z O N T A L
21. MAXIMUM AMBIENT TEMPERATURE	40 ℃
22. BEARING LUBRICATION	G R E A S E
23. STARTING METHOD	F U L L V O L T A G E

192.168.11.51 / 2019-05-21 13:51:47

불법복제 및 배포금지

THREE PHASE INDUCTION MOTOR DATA SHEET

SCHEDULE OF TECHNICAL DATA

1. SERVICE	TRAVERSING
2. MANUFACTURE	극동호이스트(주)
3. FRAME NUMBER	112 S
4. RATED POWER	1.0/0.5 KW x 6/12 P
5. RATED VOLTAGE AND FREQUENCY	380 V 60 Hz
6. MOTOR TYPE	SQUIRREL CAGE ROTOR TYPE
7. SERVICE FACTOR AND RATTING	1 . 0 , 30 MIN
8. LOCATION AND INSULATION CLASS	INDOOR, OUTDOOR, B CLASS
9. DESIGN TEMPERATURE RISE(BY RESISTANCE)	80 ℃
10. FULL LOAD SPEED	1050/460 RPM
11. FULL LOAD CURRENT	4.1/4.3 A
12. STARTING CURRENT AT RATED VOLTAGE	16.4/13.0 A
13. MINIMUM STARTING VOLTAGE	342 V
14. EFFICIENCY AT 100% RATED LOAD	59.5/35.0 %
15. POWER FACTOR AT 100% RATED LOAD	64.5/54.0 %
16. STARTING TORQUE	1.67/1.48 KG.M
17. SITE ALTITUDE(UNDER)	1000 M
18. ENCLOSURE & COOLING METHOD	T E N V
19. TYPE OF BEARING	PL : 6206zz OPL : 6206zz
20. MOUNTING	H O R I Z O N T A L
21. MAXIMUM AMBIENT TEMPERATURE	40 ℃
22. BEARING LUBRICATION	G R E A S E
23. STARTING METHOD	F U L L V O L T A G E

192.168.11.51 / 2019-05-21 13:51:47

불법복제 및 배포금지

THREE PHASE INDUCTION MOTOR DATA SHEET

SCHEDULE OF TECHNICAL DATA

1. SERVICE	TRAVERSING
2. MANUFACTURE	극동호이스트(주)
3. FRAME NUMBER	112 S
4. RATED POWER	1.0/0.5 KW x 6/12 P
5. RATED VOLTAGE AND FREQUENCY	440 V 60 Hz
6. MOTOR TYPE	SQUIRREL CAGE ROTOR TYPE
7. SERVICE FACTOR AND RATTING	1 . 0 , 30 MIN
8. LOCATION AND INSULATION CLASS	INDOOR, OUTDOOR, B CLASS
9. DESIGN TEMPERATURE RISE(BY RESISTANCE)	80 ℃
10. FULL LOAD SPEED	1050/460 RPM
11. FULL LOAD CURRENT	3.5/3.7 A
12. STARTING CURRENT AT RATED VOLTAGE	14.2/12.3 A
13. MINIMUM STARTING VOLTAGE	396 V
14. EFFICIENCY AT 100% RATED LOAD	59.5/35.0 %
15. POWER FACTOR AT 100% RATED LOAD	64.5/54.0 %
16. STARTING TORQUE	1.67/1.48 KG.M
17. SITE ALTITUDE(UNDER)	1000 M
18. ENCLOSURE & COOLING METHOD	T E N V
19. TYPE OF BEARING	PL : 6206zz OPL : 6206zz
20. MOUNTING	H O R I Z O N T A L
21. MAXIMUM AMBIENT TEMPERATURE	40 ℃
22. BEARING LUBRICATION	G R E A S E
23. STARTING METHOD	F U L L V O L T A G E

192.168.11.51 / 2019-05-21 13:51:47

불법복제 및 배포금지

THREE PHASE INDUCTION MOTOR DATA SHEET

SCHEDULE OF TECHNICAL DATA

1. SERVICE	TRAVERSING
2. MANUFACTURE	극동호이스트(주)
3. FRAME NUMBER	112 S
4. RATED POWER	1.0/0.5 KW x 6/12 P
5. RATED VOLTAGE AND FREQUENCY	460 V 60 Hz
6. MOTOR TYPE	SQUIRREL CAGE ROTOR TYPE
7. SERVICE FACTOR AND RATTING	1 . 0 , 30 MIN
8. LOCATION AND INSULATION CLASS	INDOOR, OUTDOOR, B CLASS
9. DESIGN TEMPERATURE RISE(BY RESISTANCE)	80 ℃
10. FULL LOAD SPEED	1050/460 RPM
11. FULL LOAD CURRENT	3.4/3.6 A
12. STARTING CURRENT AT RATED VOLTAGE	13.5/10.8 A
13. MINIMUM STARTING VOLTAGE	414 V
14. EFFICIENCY AT 100% RATED LOAD	59.5/35.0 %
15. POWER FACTOR AT 100% RATED LOAD	64.5/54.0 %
16. STARTING TORQUE	1.67/1.48 KG.M
17. SITE ALTITUDE(UNDER)	1000 M
18. ENCLOSURE & COOLING METHOD	T E N V
19. TYPE OF BEARING	PL : 6206zz OPL : 6206zz
20. MOUNTING	H O R I Z O N T A L
21. MAXIMUM AMBIENT TEMPERATURE	40 ℃
22. BEARING LUBRICATION	G R E A S E
23. STARTING METHOD	F U L L V O L T A G E

192.168.11.51 / 2019-05-21 13:51:47

불법복제 및 배포금지

THREE PHASE INDUCTION MOTOR DATA SHEET

SCHEDULE OF TECHNICAL DATA

1. SERVICE	TRAVERSING
2. MANUFACTURE	극동호이스트(주)
3. FRAME NUMBER	112 S
4. RATED POWER	1.0/0.5 KW x 6/12 P
5. RATED VOLTAGE AND FREQUENCY	480 V 60 Hz
6. MOTOR TYPE	SQUIRREL CAGE ROTOR TYPE
7. SERVICE FACTOR AND RATTING	1 . 0 , 30 MIN
8. LOCATION AND INSULATION CLASS	INDOOR, OUTDOOR, B CLASS
9. DESIGN TEMPERATURE RISE(BY RESISTANCE)	80 ℃
10. FULL LOAD SPEED	1050/460 RPM
11. FULL LOAD CURRENT	3.2/3.4 A
12. STARTING CURRENT AT RATED VOLTAGE	13.0/10.3 A
13. MINIMUM STARTING VOLTAGE	432 V
14. EFFICIENCY AT 100% RATED LOAD	59.5/35.0 %
15. POWER FACTOR AT 100% RATED LOAD	64.5/54.0 %
16. STARTING TORQUE	1.67/1.48 KG.M
17. SITE ALTITUDE(UNDER)	1000 M
18. ENCLOSURE & COOLING METHOD	T E N V
19. TYPE OF BEARING	PL : 6206zz OPL : 6206zz
20. MOUNTING	H O R I Z O N T A L
21. MAXIMUM AMBIENT TEMPERATURE	40 ℃
22. BEARING LUBRICATION	G R E A S E
23. STARTING METHOD	F U L L V O L T A G E

192.168.11.51 / 2019-05-21 13:51:47

불법복제 및 배포금지

KISWIRE
5, Sandan 6-ro, Jeonggwan-myeon, Gijang-gun, Busan, 46026, Korea
TEL:+82-51-727-0015 FAX:+82-51-727-3247 www.kiswire.com

CERT NO. 201304WRW45800 DATE *Feb. 20, 2015*

MILL TEST CERTIFICATE

THIS IS TO CERTIFY THAT THE MATERIAL DESCRIBED BELOW WAS MANUFACTURED IN ACCORDANCE WITH KISWIRE LTD SPECIFICATION AND APPLICABLE SECTIONS OF KSD 3514 - 2002 (B Grade)

TO MESSRS

MATERIAL DESCRIPTION UNGALVANIZED STEEL WIRE ROPE

06 X 29 (FI) + IWRC 2000 M X 5 REEL

EX NO. 1W6288

ORDER NO. REEL NO. 1 ~ 5 SAMPLING NO. 1

DIAMETER OF ROPE 18.000 mm TYPE OF CORE IWRC

SPECIFIED BREAKING LOAD 219.00 kN SAMPLE BROKE AT 231.69 kN

WT. OF ZINC COATING OF OUTER WIRE MIN. 0.000 g/m²

ROPE LAY RHRL LAY LENGTH 113.72 mm

LUBRICATION A-2

CHEMICAL ANALYSIS OF WIRE ROD

CHARGE NO.	C X 100	Si X 100	Mn X 100	P X 1000	S X 1000
M29703	75	16	76	15	10

DATE OF SAMPLE TEST *Apr. 23, 2013*

S. H. Ham

Approved by Q.C Manager S.H. Ham
KISWIRE LTD., KOREA

KS JIS ABS KR NK. G.Lloyd's DNV L.R BV

192.168.11.51 / 2019-05-21 13:51:47